Sea Water Pump, Components: 3580945

MD2030C, MD2030D, MD2040C, MD2040D

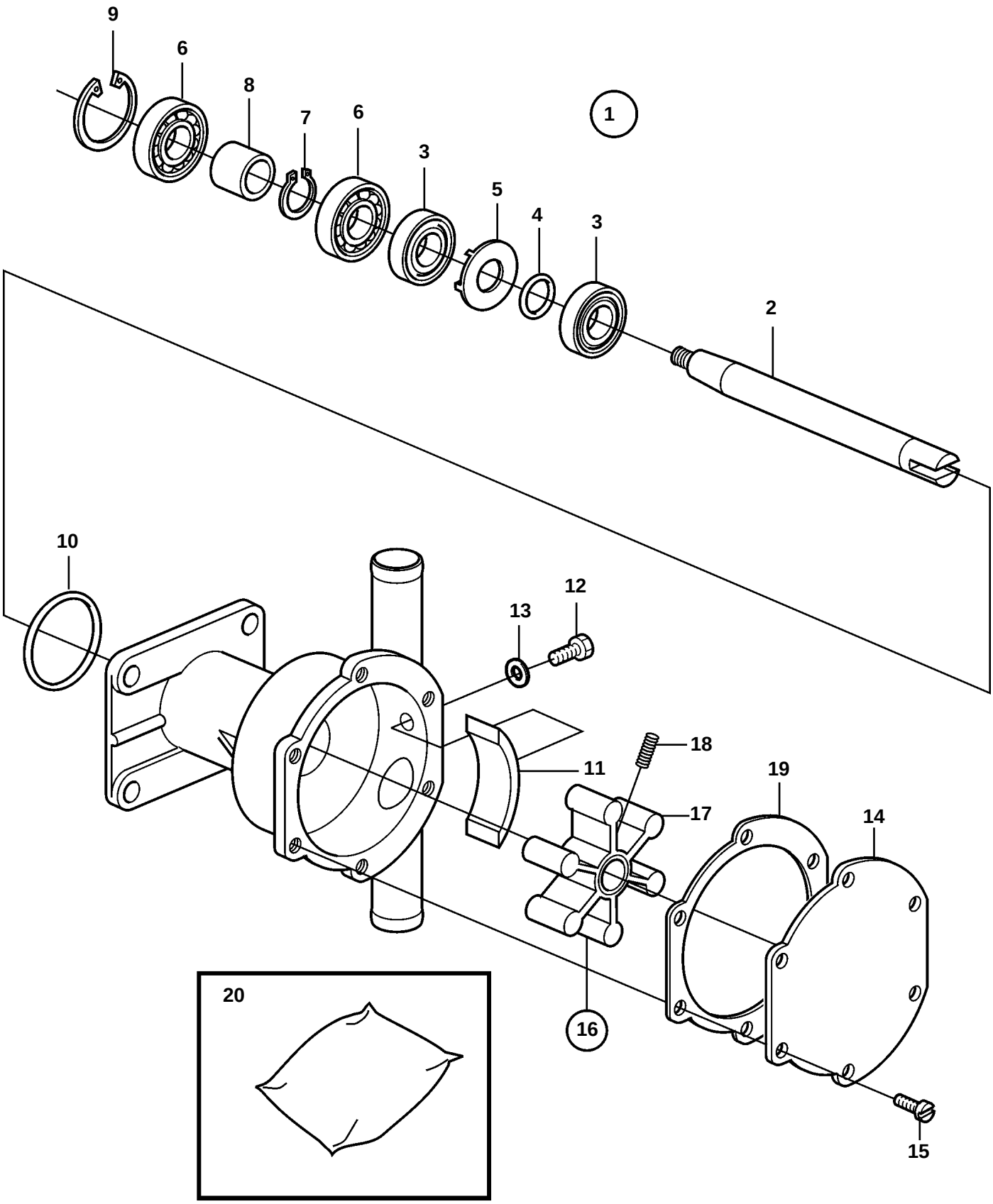

17652

MD2030C, MD2030D, MD2040C, MD2040D

REF	PART NO.	QTY	DESCRIPTION		NOTES
1	876700	1	Repair kit		
2		1	· Shaft		
3	833996	2	· Sealing ring		
4	925055	1	· O-ring		
5	859101	1	· Spacer washer		
6	181717	2	· Ball bearing		
7	914446	1	· Lock ring		
8	3581367	1	· Spacer sleeve		
9	914515	1	· Lock ring		
10	3580380	1	· O-ring		
11	827009	1	· Cam		
12	804693	1	· Screw		
13	18669	1	· Gasket		
14	840386	1	· Cover		
15	840384	6	· Screw		
16	3586497	1	Impeller kit		(875808)
17		1	· Impeller		
18	804697	1	· Screw		
19	819959	1	· Gasket		