MD2010B, MD2020B, MD2030B, MD2040B

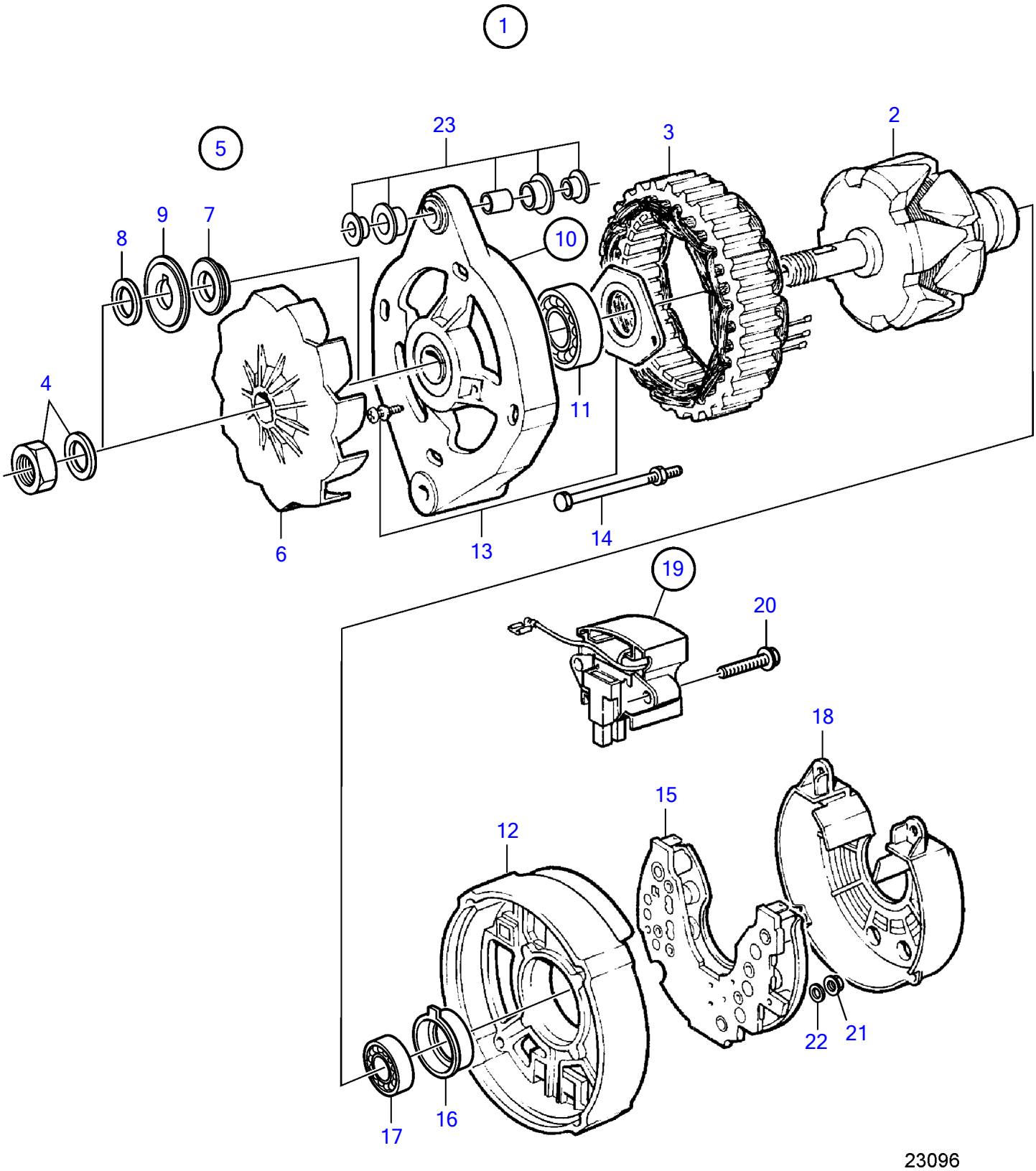

MD2010B, MD2020B, MD2030B, MD2040B

REF	PART NO.	QTY	DESCRIPTION	NOTES
1	872235	1	Alternator	14V 60A
	3803260	1	Alternator, exch, exch	14V 60A
2		1	・Rotor	
3	(873237)	1	・Stator	Obsolete part
4	6212688	1	・Mounting kit	
5	(860281)	1	・Fan kit	Obsolete part
6	860282	1	・・Fan	
7	862897	1	・・Spacer	
8	860284	1	・・Spacer	
9	860283	1	・・Washer	
10		1	・End plate	
11	860432	1	・・Ball bearing	
12		1	・End plate	
13	(840625)	1	・Mounting kit	Obsolete part
14		1	・Screw kit	
15	(1698689)	1	・Diode bridge	Obsolete part
16	(873241)	1	・Bearing carrier	Obsolete part
17	(873239)	1	・Ball bearing	Obsolete part
18	873240	1	・Protecting casing	
19	872720	1	・Governor	
20		2	・・Screw	
21	955779	1	・Hexagon nut	(M4) W
	965483	2	・Flange nut	(M5) D+,B-
	945407	1	・Flange nut	(M6) B-
22	980689	1	・Washer	(For M4) W
23	840634	1	・Guide	