MD2010B, MD2020B, MD2030B, MD2040B

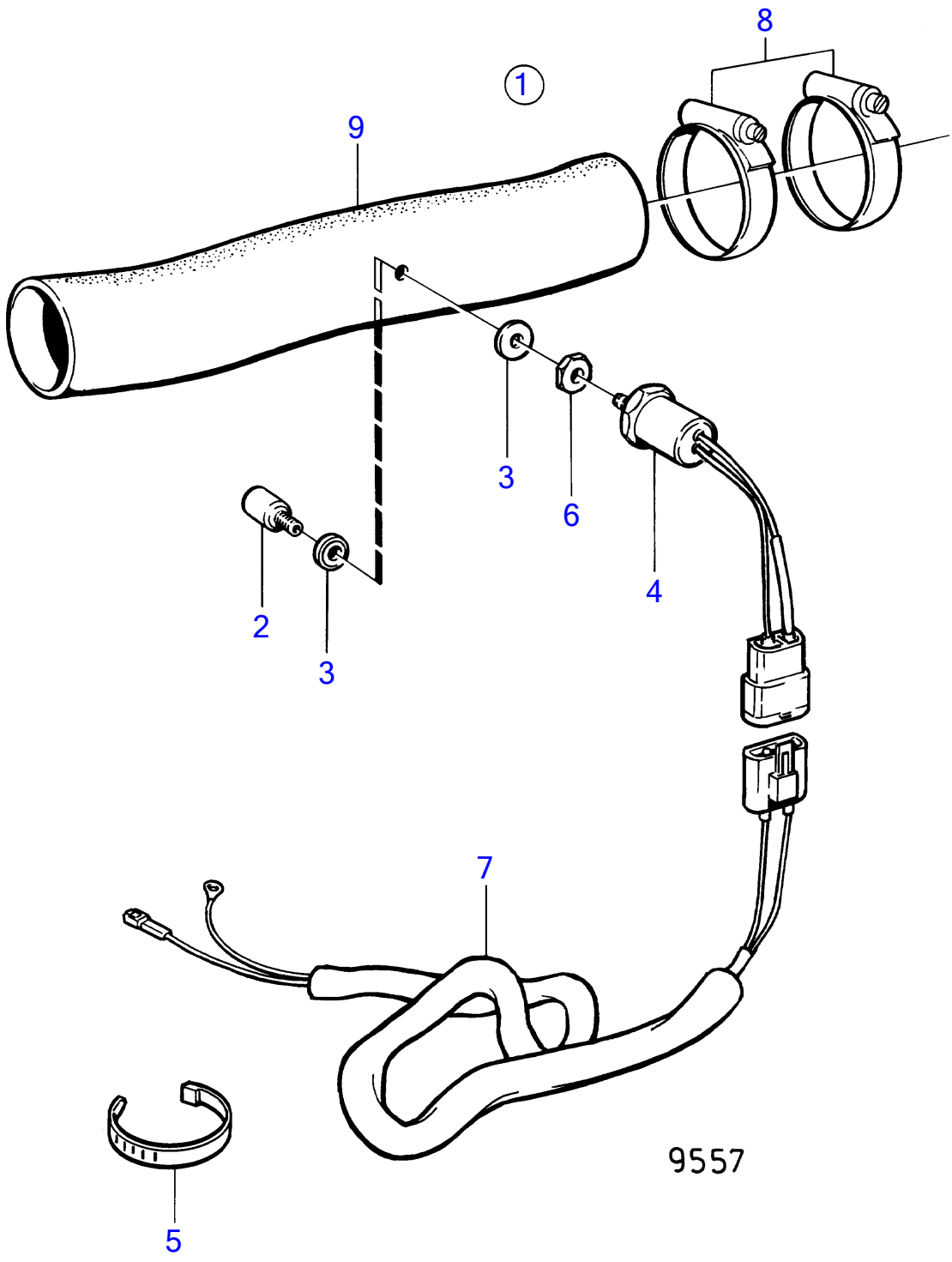

MD2010B, MD2020B, MD2030B, MD2040B

REF	PART NO.	QTY	DESCRIPTION	SEE SEC.	NOTES
1	877773	1	Exhaust temperature		(828762)
2	828749	1	▪ Sensor		
3	828776	2	▪ Washer		
4	828761	1	▪ Thermo monitor		80°C
5	948211	1	▪ Cable tie		
6	828750	1	▪ Nut		
7		X	▪ cables and terminals	1963	
8	961671	X	Hose clamp		
9	1140665	X	Exhaust hose		(828463)