MD2020B

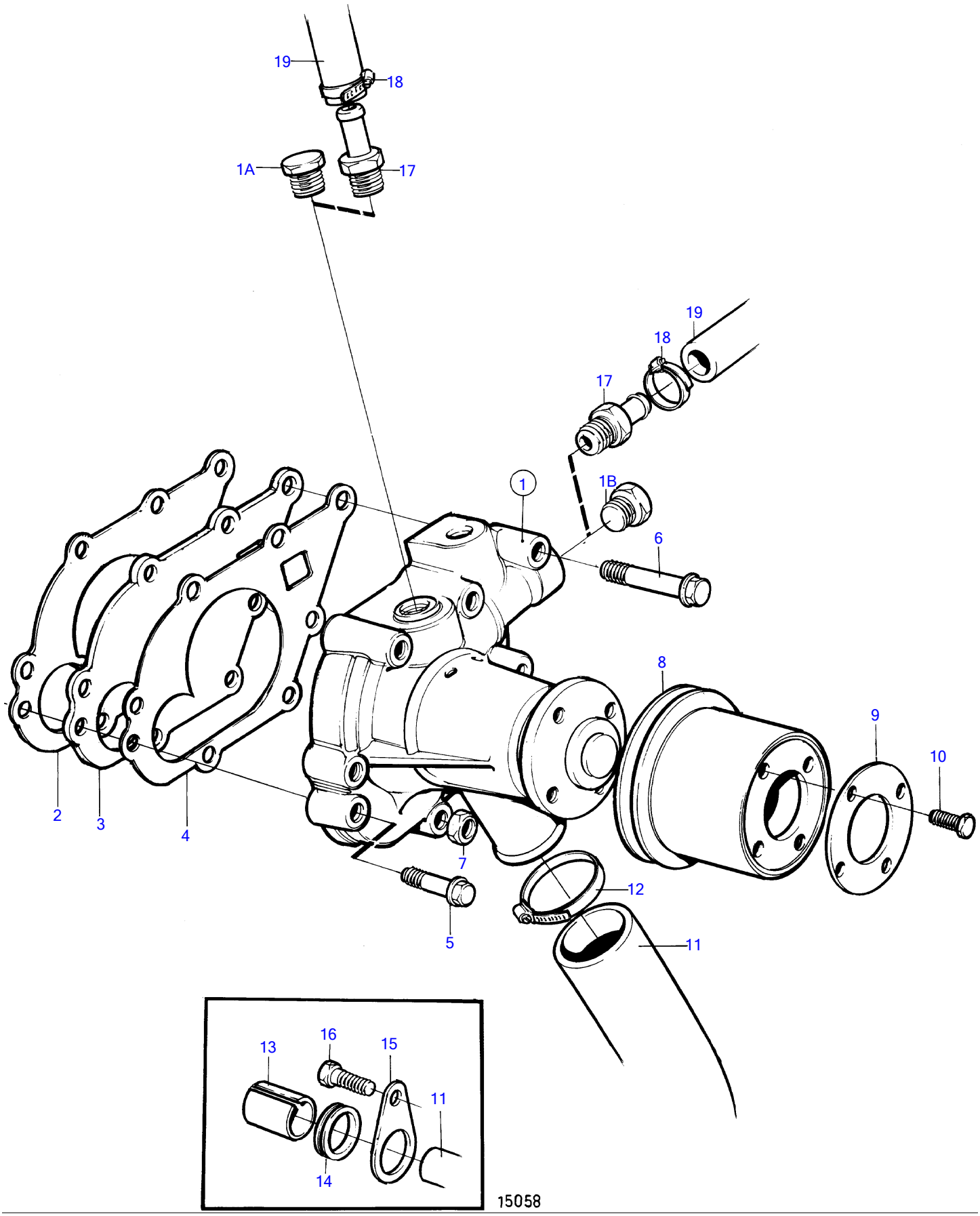

MD2020B

REF	PART NO.	QTY	DESCRIPTION	NOTES
1	861990	1	Water pump	
1A		1	▪ Plug	
1B		1	▪ Plug	
2	3580001	1	Gasket	
3	3580257	1	Plate	
4	3580001	1	Gasket	
5	3580258	3	Screw	
6	3580243	4	Screw	
7	945407	1	Flange nut	
8	3580011	1	Pulley	
9	3580012	1	Flange	
10	3580013	4	Screw	
11	3580248	1	Rubber hose	Heat exchanger-water pump.
12	853548	1	Hose clamp	
13		1	Protecting hose	
14	3580251	1	Grommet	
15	3580250	1	Stay	
16	947107	1	Flange screw	
17	976040	2	Hose nipple	Hot water outlet.
18	961665	2	Hose clamp	
19	952969	X	Hose	