Control Connection, Speed and Stop Control: MD2030A

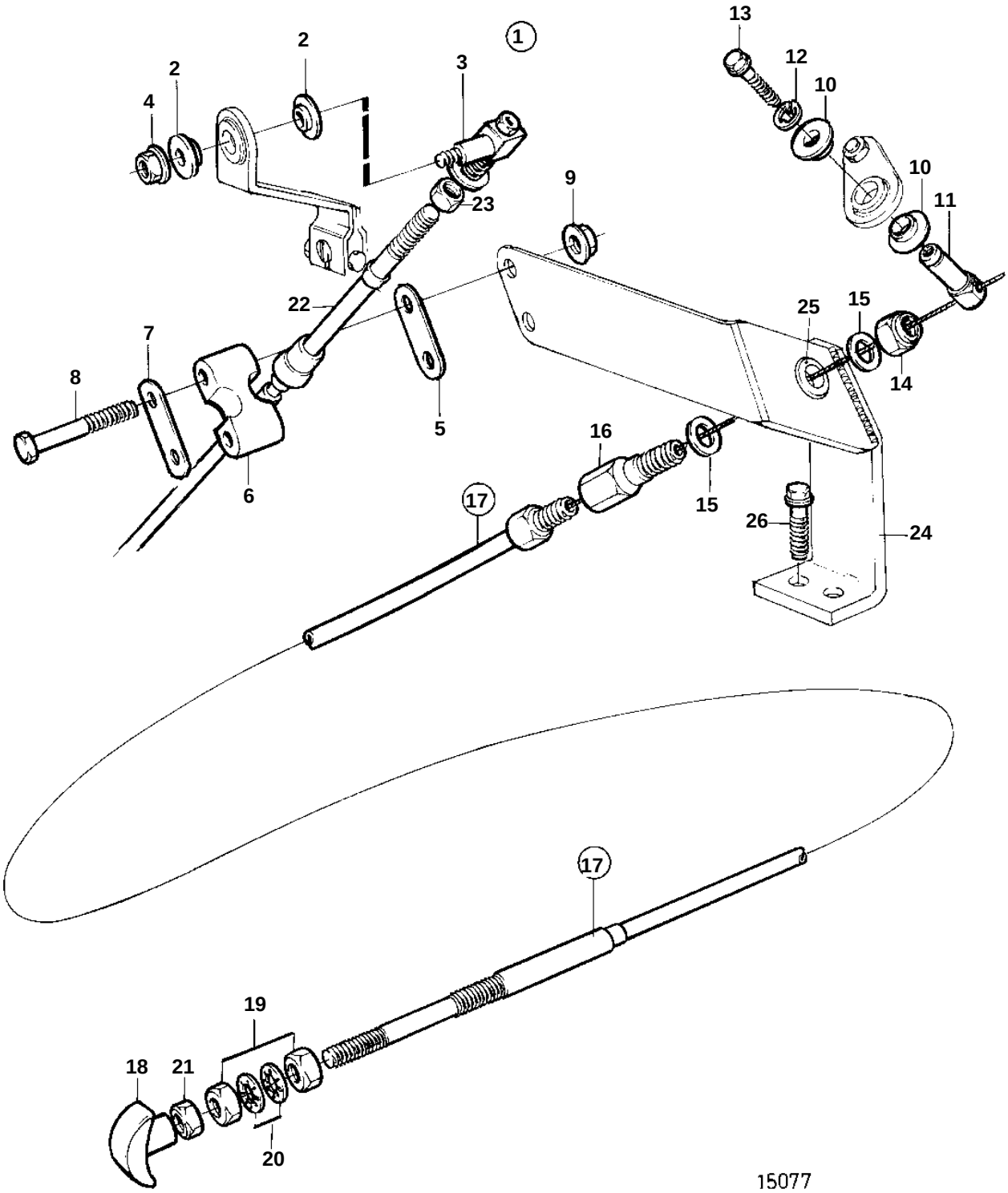

REF	PART NO.	QTY	DESCRIPTION		SEE SEC.	NOTES
1		1	Connector kit			
2	843105	2	· Spacer washer			
3	840692	1	· Cube			
4	946577	1	· Lock nut			
5	872076	1	· Washer			
6	872074	1	· Retainer			
7	819068	1	· Washer			
8	955251	2	· Screw	SO		
9	946577	2	· Lock nut			
10	843105	2	· Spacer washer			
11	861479	1	· Cable clamp			
12	951669	1	· Retaining ring			
13	955229	1	· Screw			
14	950353	1	· Lock nut			
15	955894	2	· Washer			
16	829070	1	· Cable lock			
17	825765	1	Stop cable			L=3,3m
	825764	1	Stop cable			L=6,9m
18	829241	1	· Handle			
19	955857	2	· Nut			
20	955950	2	· Lock washer			
21	955844	1	· Nut			
22		1	Control cable		231	
23		1	· Nut	NS		
24	3580400	1	Anchorage			
25	843109	1	Bushing			
26	861844	2	Screw			