WATER COOLED EXHAUST MUFFLER WITH INSTALLATION COMPONENTS, LATER PROD

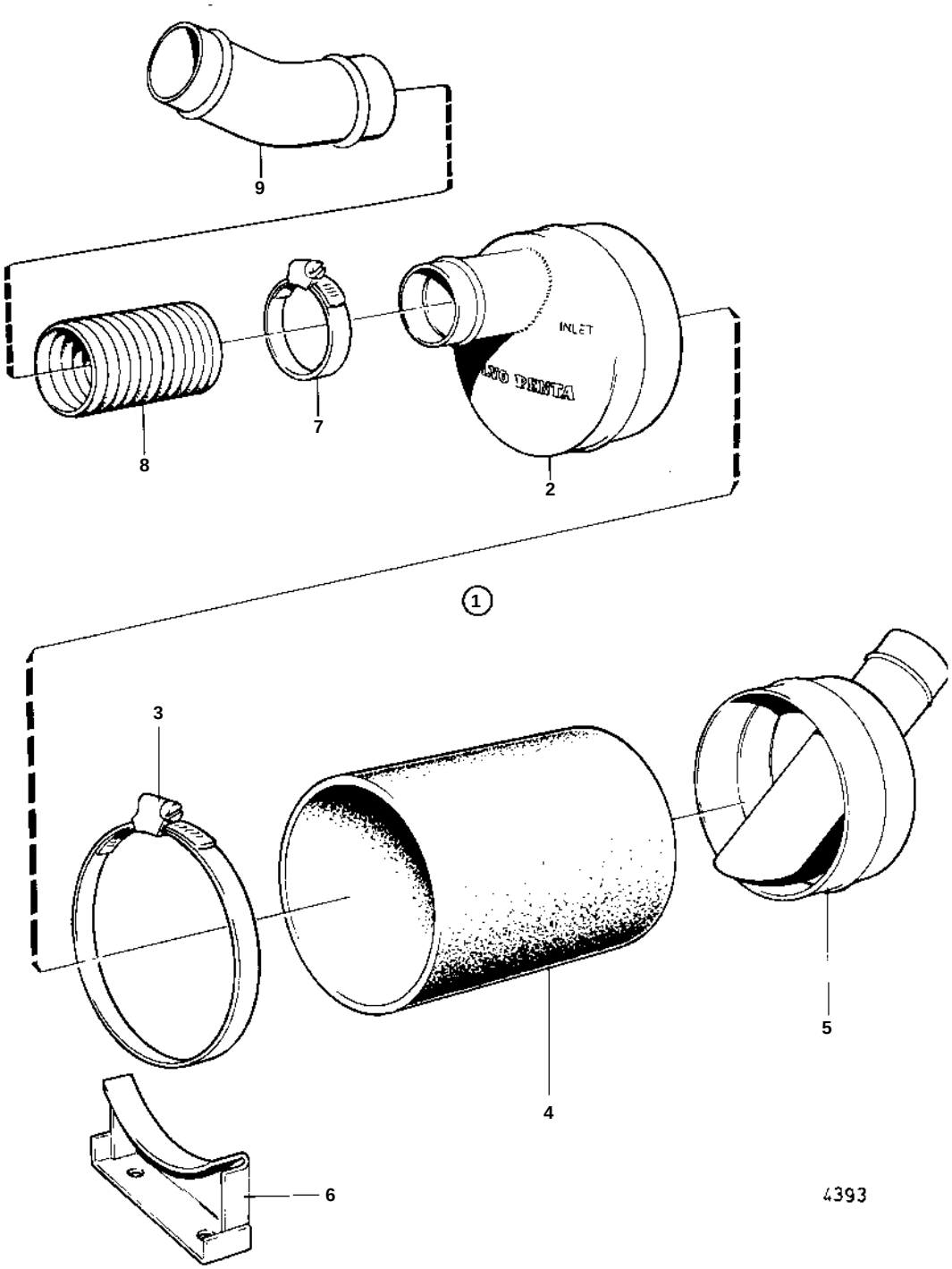

WATER COOLED EXHAUST MUFFLER WITH INSTALLATION COMPONENTS, LATER PROD

REF	PART NO.	QTY	DESCRIPTION		NOTES
1	828064	1	Muffler		
2		1	· COVER		
3	961678	4	· Hose clamp		
4	828059	1	· Hose		
5		1	· COVER		
6	828061	2	· Bracket		
7	961672	X	Clamp		
8	833755	X	Hose		
9	828256	1	Riser		45%Z9