MD1B

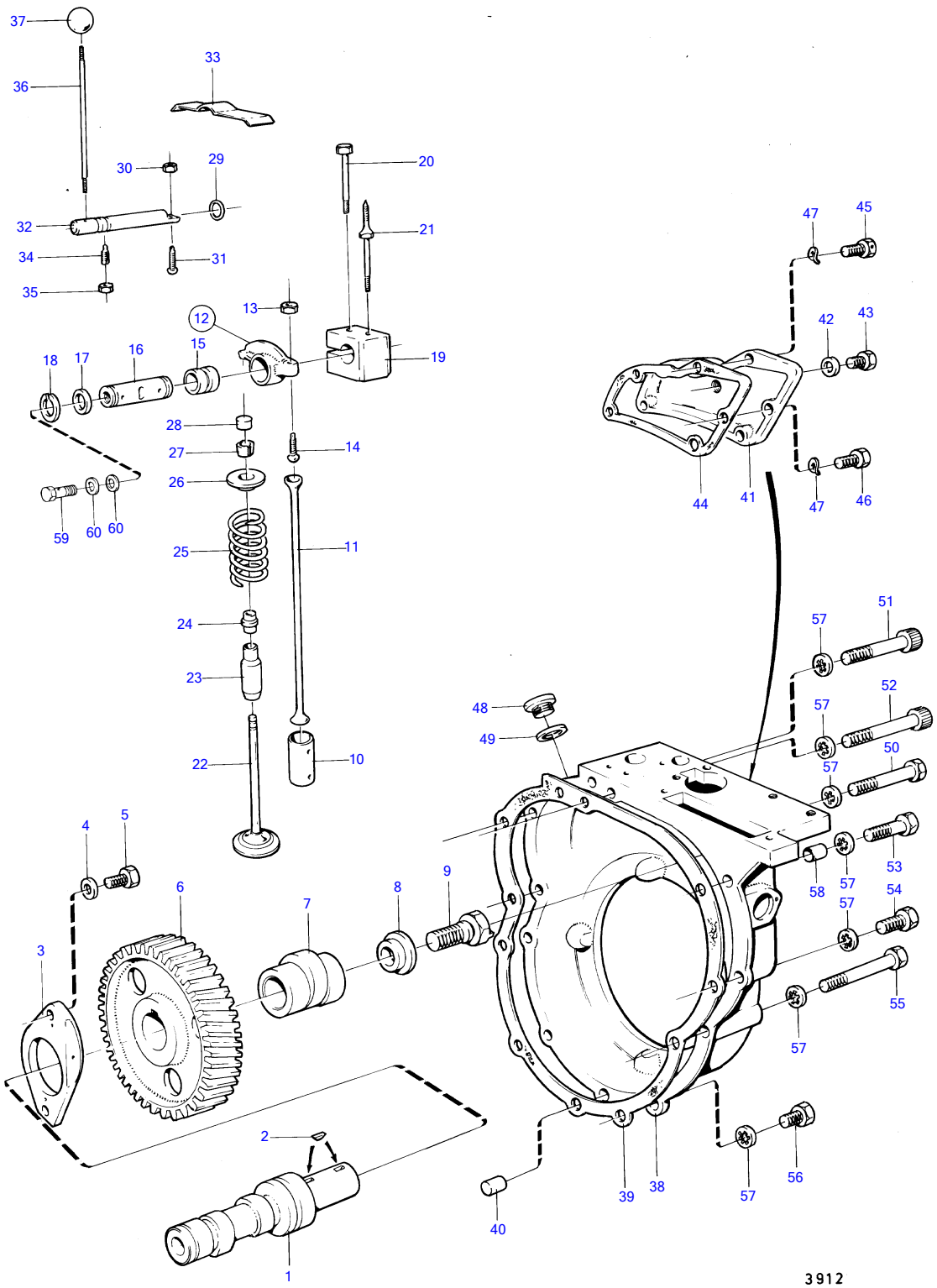
37
36
33
30
29
20
32
21
34
31
35
13
12
15
16
17
18
19
28
27
14
26
59
60
60
25
11
24
23
22
10
47
45
42
43
44
41
47
46
51
57
52
57
48
49
50
57
4
5
6
7
8
9
58
57
53
54
57
3
55
57
2
39
38
57
56
40
1
3912

MD1B

REF	PART NO.	QTY	DESCRIPTION	SEE SEC.	NOTES
1	(833162)	1	Camshaft		Obsolete part
2	(910121)	2	Woodruff key		Obsolete part
3	(405079)	1	Flange		Obsolete part
4	(15256)	2	Washer		Obsolete part
5	955296	2	Hexagon screw		
6	(405026)	1	Gear		Obsolete part
7	(833485)	1	Cam disc		Obsolete part
8	(803348)	1	Guide washer		Obsolete part
9	(807031)	1	Screw		Obsolete part
10	807393	2	Tappet		
11	403130	2	Push rod		
12	(403561)	1	Rocker arm, intake		Obsolete part
	(803247)	1	Rocker arm, exhaust		Obsolete part
13	(955800)	2	・Hexagon nut		Obsolete part
14	403155	2	・Ball stud		
15	(18146)	2	・Bushing		Obsolete part
16	(833222)	1	Rocker arm shaft		Obsolete part
17	(191173)	4	Shim		TH=0.7mm, Obsolete part
18	(914452)	2	Snap ring		Obsolete part
19	(833223)	1	Bearing box		Obsolete part
20	955300	1	Hexagon screw		
21	(833569)	1	Screw	13743	Obsolete part
22	833188	1	Valve		
	829620	1	Exhaust valve		Early type of exhaust valve + valve seal is replaced by 829620.
23	419653	1	Valve guide, intake	13743	
	829867	1	Guide sleeve, exhaust	13743	
24	1306630	1	Valve stem seal, intake		(833347)
25	829622	2	Valve spring		(403387)
26	403314	2	Valve spring washer		
27	403315	4	Lock		
28	896580	2	Valve cap		
29	925053	1	O-ring		
30	(955800)	1	Hexagon nut		Obsolete part
31	403155	1	Ball stud		
32		1	shaft		Replaced by 1ea 833499 + 1ea 945292 + 1ea 940344., MO-18708
	(833499)	1	Shaft		Obsolete part, MO 18709-
33	(803604)	1	Spring		Obsolete part
34	(919118)	1	Set screw		Obsolete part
35	955781	1	Hexagon nut		
36	(897390)	1	Stud		Obsolete part, MO-18708
	945292	1	Stud		MO 18709-
37	(807042)	1	Ball		Obsolete part, MO-18708
	940344	1	Wing nut		MO 18709-
38	(833183)	1	Timing gear casing		Obsolete part
39	803360	1	Gasket		
40	950586	2	Pin	13754	
41		1	cover		Replaced by 1ea 833766 + 1ea 957175 + 1ea 16322., MO-22018
	(833766)	1	Hatch		Obsolete part, MO 22019-
42	957175	1	Gasket		MO 22019-
43	(16322)	1	Plug		Obsolete part, MO 22019-
44	897327	1	Gasket		
45	192356	1	Hexagon screw		
46	955273	4	Hexagon screw		
47	941906	5	Spring washer		
48		1	plug		Replaced by 1ea 833511 + 1ea 807363., MO-18791
	(833511)	1	Plug		Obsolete part, MO 18792-20599
	(833496)	1	Plug		Obsolete part, MO 20600-
49	925065	1	O-ring		MO-18791
	807363	1	Sealing ring		MO 18792-20599
	957191	1	Gasket		MO 20600-
50	(192357)	1	Screw		Obsolete part, L=115mm
51	(945295)	1	Screw		Obsolete part, L=110mm
52	(943795)	1	Hex. socket screw		Obsolete part, L=130mm

MD1B

REF	PART NO.	QTY	DESCRIPTION	SEE SEC.	NOTES
53	(946408)	1	Screw		Obsolete part, L=75mm
54	955324	1	Hexagon screw		L=60mm
55	955332	1	Hexagon screw		L=120mm
56	955318	2	Hexagon screw		L=30mm
57	940109	8	Toothed washer		
58	943835	1	Plug		
59	74033	1	Hollow screw	13744	
60	957171	2	Gasket		