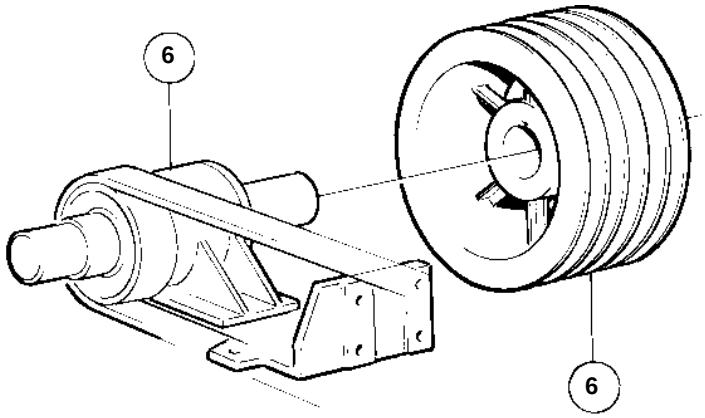

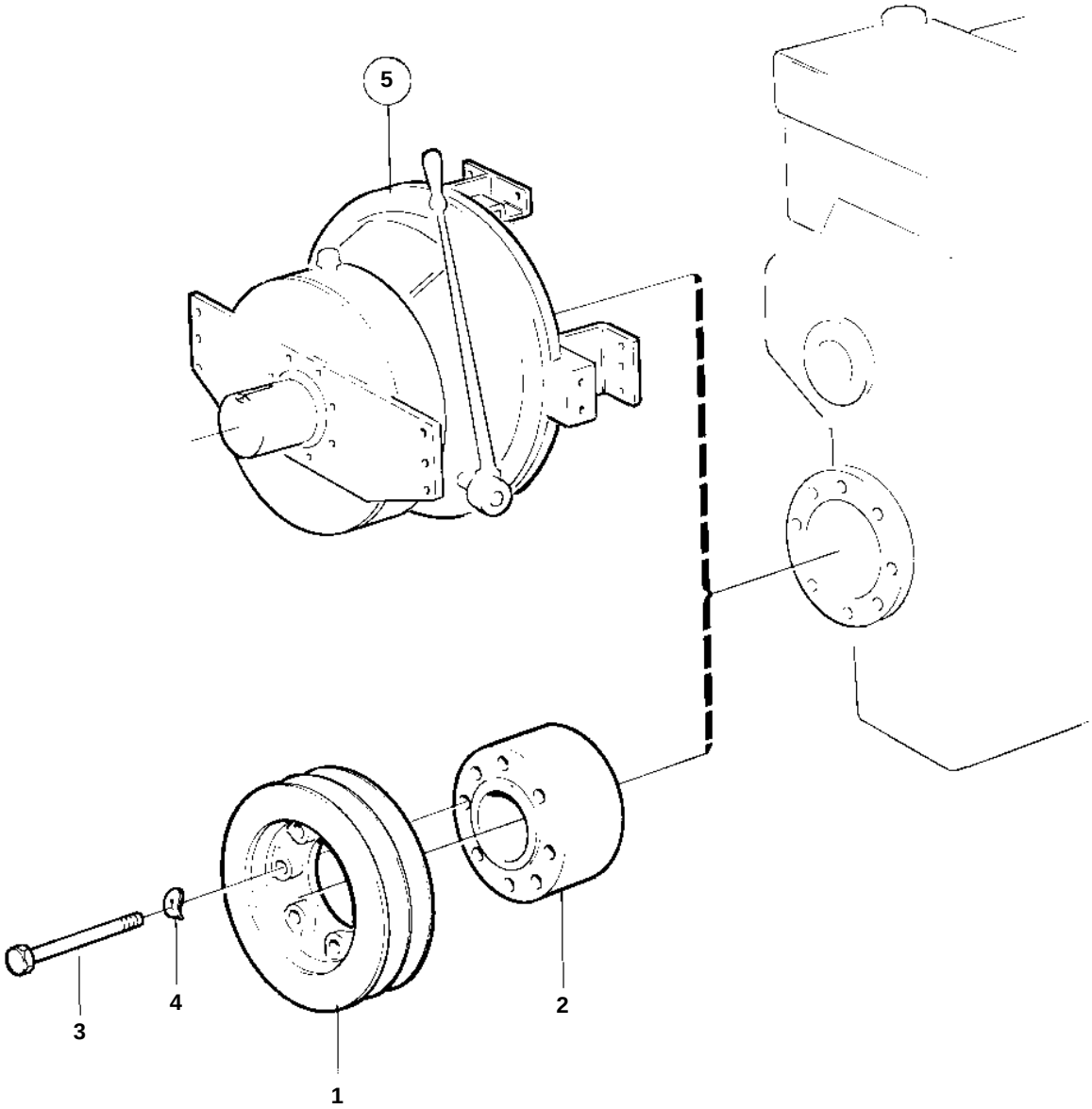

6531

EXTRA BELT PULLEY: TMD120B

REF	PART NO.	QTY	DESCRIPTION		NOTES
1	823082	1	Pulley, 3 GROOVES		
2	823083	1	Spacer ring		
3	959804	12	Screw		
4	941909	12	Spring washer		
5		1	POWER TAKE-OFF		SEE GROUP 4A
6		1	DRIVE TAKE OFF		SEE GROUP 4A