EXTRA BELT PULLEY: TAMD120B

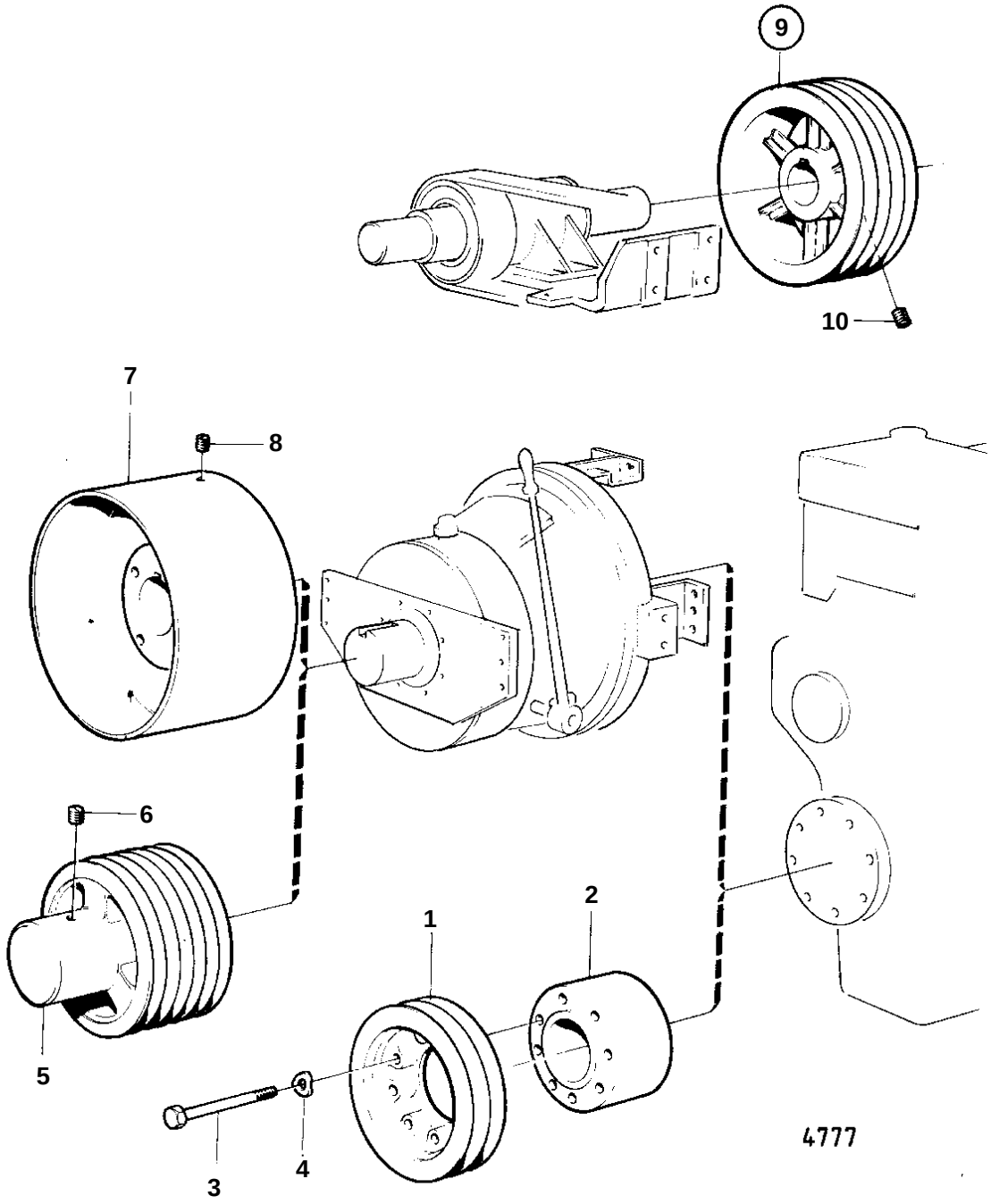

EXTRA BELT PULLEY: TAMD120B

REF	PART NO.	QTY	DESCRIPTION		NOTES
1	823028	1	Pulley, 2 GROOVES		
2	823083	1	Spacer ring		
3	955554	12	Screw		L = 76 MM
	959804	12	Screw		L = 127 MM
4	941909	12	Spring washer		
5	803689	1	Pulley		
6	915602	1	Screw		
7	804621	1	Pulley		D = 300 MM
	804664	1	Pulley		D = 350 MM
8	915605	1	Set screw		