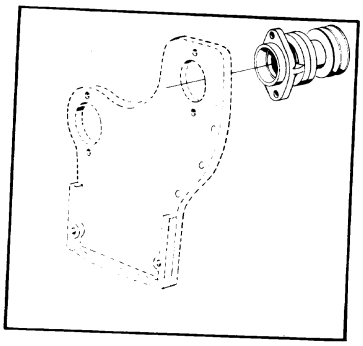

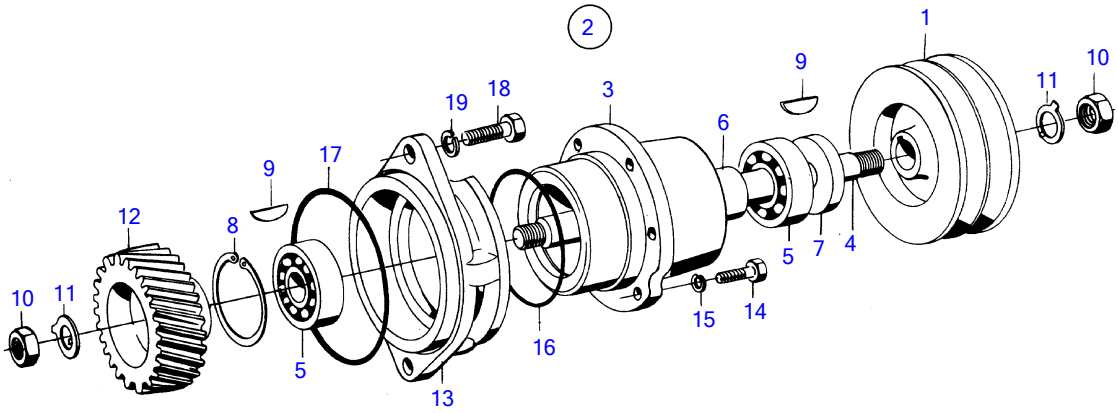

3459

REF	PART NO.	QTY	DESCRIPTION	NOTES
1	(821182)	1	Pulley	Obsolete part
2	821066	1	Drive outlet	
3		1	▪ housing	
4	821068	1	▪ Shaft	
5	11013	2	▪ Ball bearing	
6	821072	1	▪ Spacer sleeve	
7	958993	1	▪ Sealing ring	
8	914533	1	▪ Snap ring	
9	942406	2	▪ Woodruff key	
10	955860	2	▪ Hexagon nut	
11	942735	2	▪ Tab washer	
12	821090	1	Gear	
13	821091	1	Spacer	
14	940114	3	Hexagon screw	
15	942336	3	Spring washer	
16	925095	1	O-ring	
17	420213	1	Seal	
18	940115	2	Hexagon screw	
19	942336	2	Spring washer	