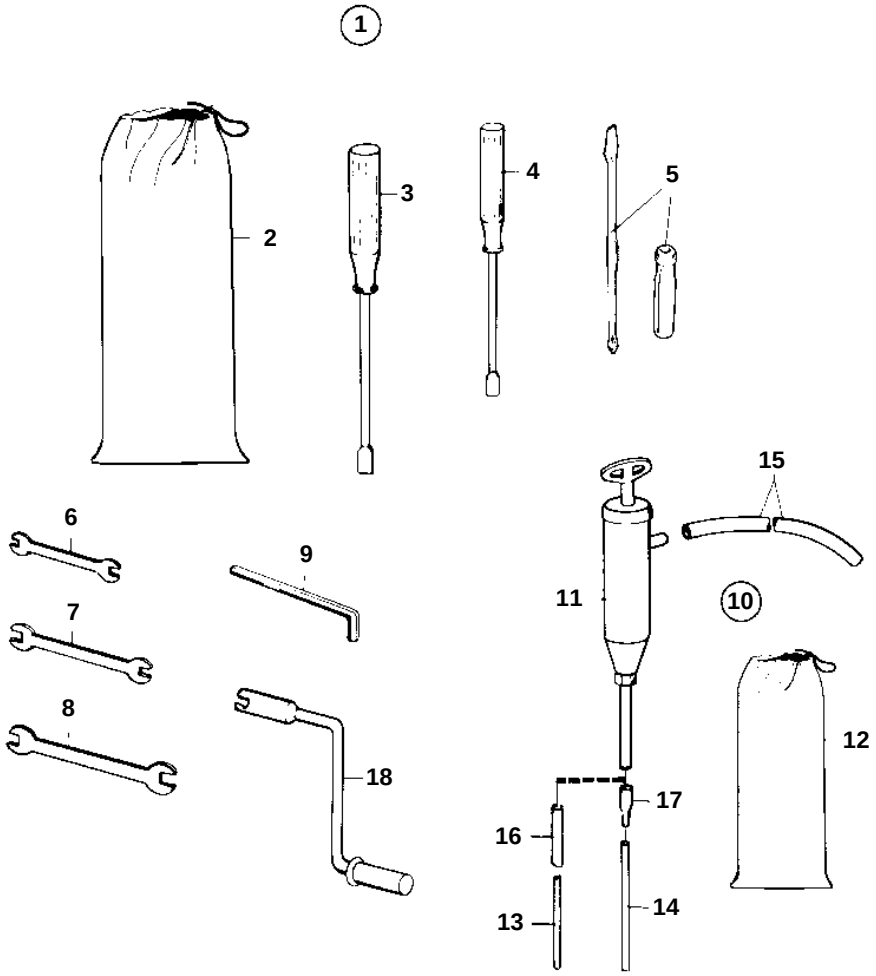

7042

REF	PART NO.	QTY	DESCRIPTION		NOTES
1	844636	1	Tool kit		
2	844642	1	· Tool bag		
4	841044	1	· Screwdriver		
5	963929	1	· Screwdriver		
6	843929	1	· Open-end wrench		8-10 MM
	210056	1	· Open-end wrench		11-12 MM
7	841252	1	· Open-end wrench		13-16 MM
	962053	1	· Open-end wrench		13-17 MM
	962060	1	· Open-end wrench		14-17 MM
8	962054	1	· Open-end wrench		19-22 MM