CRANKSHAFT AND RELATED PARTS: MD11C

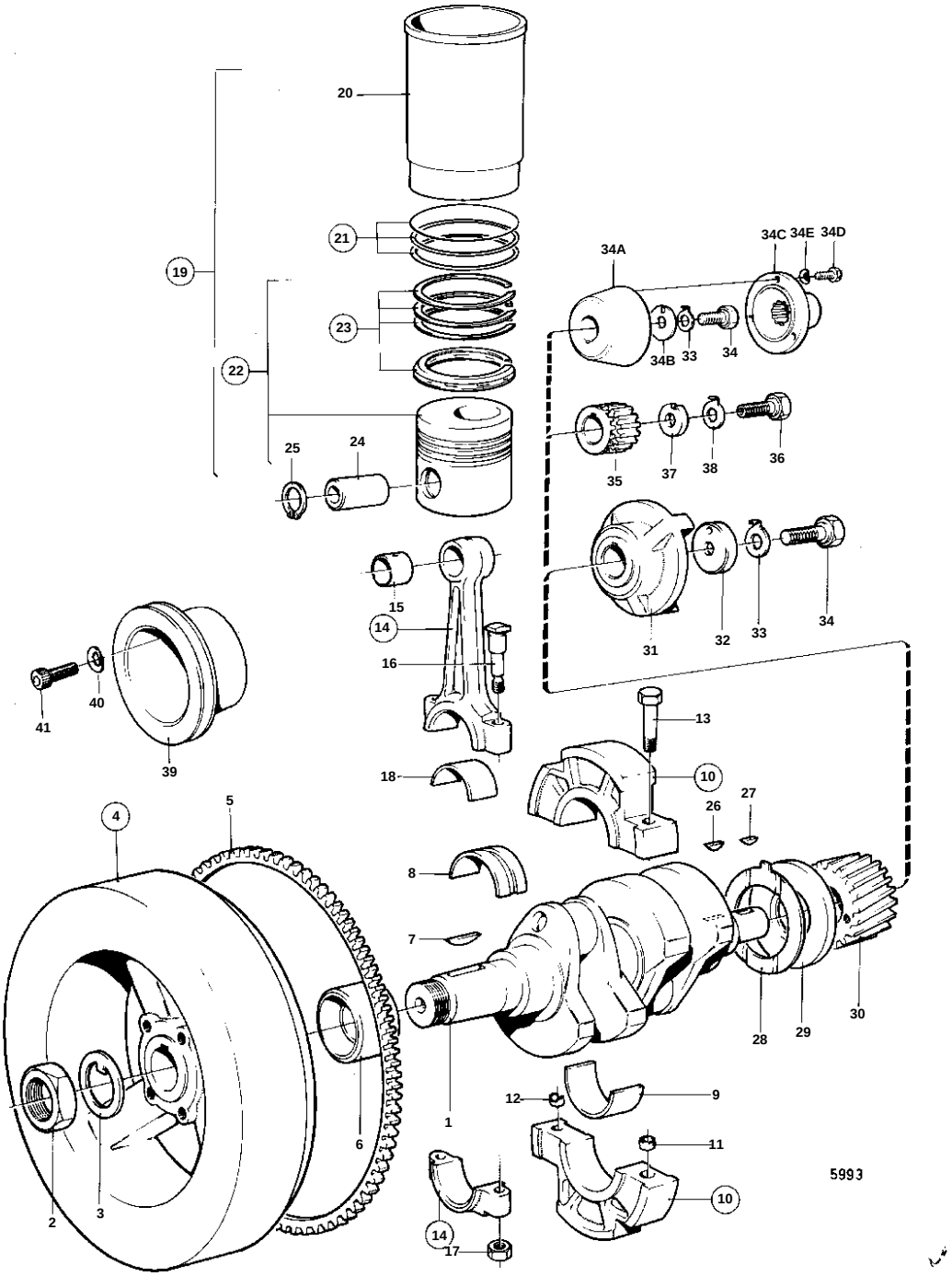

REF	PART NO.	QTY	DESCRIPTION		SEE SEC.	NOTES
1	833745	1	Crankshaft			(833986). EXCL MD11C/HD-RB SPEC 867351,-499,-577. EXCL MD11C/HD-BT.
	829625	1	Crankshaft			MD11C/HD-BT. MO-35930.. MD11C/HD-RB SPEC 867351,-499,-577.
2	10764	1	Nut			
3	15192	1	Washer			
4	829956	1	Flywheel			(833844)
5	833489	1	· Gear ring			
6	803356	1	Sealing ring	IK	02A-0450	
7	910121	1	Key			
8	875483	2	Main bearing kit			STD D
	875485	2	Main bearing kit			0,25 MM U.S
	875486	2	Main bearing kit			0,50 MM U.S
	875487	2	Main bearing kit			0,75 MM U.S
9	875484	1	Main bearing kit			STD D
	875488	1	Main bearing kit			0,25 MM U.S
	875489	1	Main bearing kit			0,50 MM U.S
	875490	1	Main bearing kit			0,75 MM U.S
10	897223	1	Bearing			
11	70415	1	· Guide sleeve			
12	301718	1	· Guide sleeve			
13	955343	2	· Screw			
14	807039	2	Connecting rod			
15	803555	2	· Bushing			
16	807040	4	· Screw			
17	463643	4	· Nut			
18	875491	2	Big end bearing kit			STD D
	875492	2	Big end bearing kit			0,25 MM U.S
	875493	2	Big end bearing kit			0,50 MM U.S
	875494	2	Big end bearing kit			0,75 MM U.S
19	875549	2	Cylinder liner kit			
20		2	· CYLINDER LINER			
21	875550	2	· Sealing ring kit		02A-0450	
22	875551	2	· Piston kit			
23	875498	2	· · Piston ring kit			
24	833185	2	· · Piston pin			
25	914515	4	· · Lock ring			
26	910121	1	Key			
27	910121	1	Key			SEE GROUP 4A
28	803515	2	Thrust washer			
29	802502	1	Support washer			
30	405025	1	Gear			
31	833746	1	Companion flange			SEE GROUP 4A. MD11C, MD11C/HY, MD11C/110S.. MD11C/HD-BT, MO 35931-.
32	833785	1	Washer			
33	833849	1	Lock washer			SEE GROUP 4A
34	959664	1	Screw			
35	802588	1	Gear			MD11C/HD-BT, MO-35930. MD11C/HD-RB.
36	807041	1	Screw			MD11C/HD-BT, MO-35930. MD11C/HD-RB.
37	803225	1	Washer			MD11C/HD-BT, MO-35930. MD11C/HD-RB.
38	803226	1	Washer			MD11C/HD-BT, MO-35930. MD11C/HD-RB.
39	833425	1	Pulley			
	833425	1	Pulley			MO-51375. SPEC 867421, -498, -540.
	829636	1	Pulley, 2 GROOVES			MD11C/HD-RB, MD11C/HD-BT, MD11C/HD-HY.. SPEC 867499, MO-51375.
	829603	1	Pulley, 2 GROOVES			MO 51376-. SPEC 867499, -677, -678.

REF	PART NO.	QTY	DESCRIPTION		SEE SEC.	NOTES
40	942336	4	Spring washer			MO 51376-. SPEC 867499, -677, -678.
41	959240	4	Screw			MO 51376-. SPEC 867499, -677, -678.
	959239	4	Screw			L = 30 MM. FOR PULLEY 433425.