KAMD42P-A, KAD42P-A

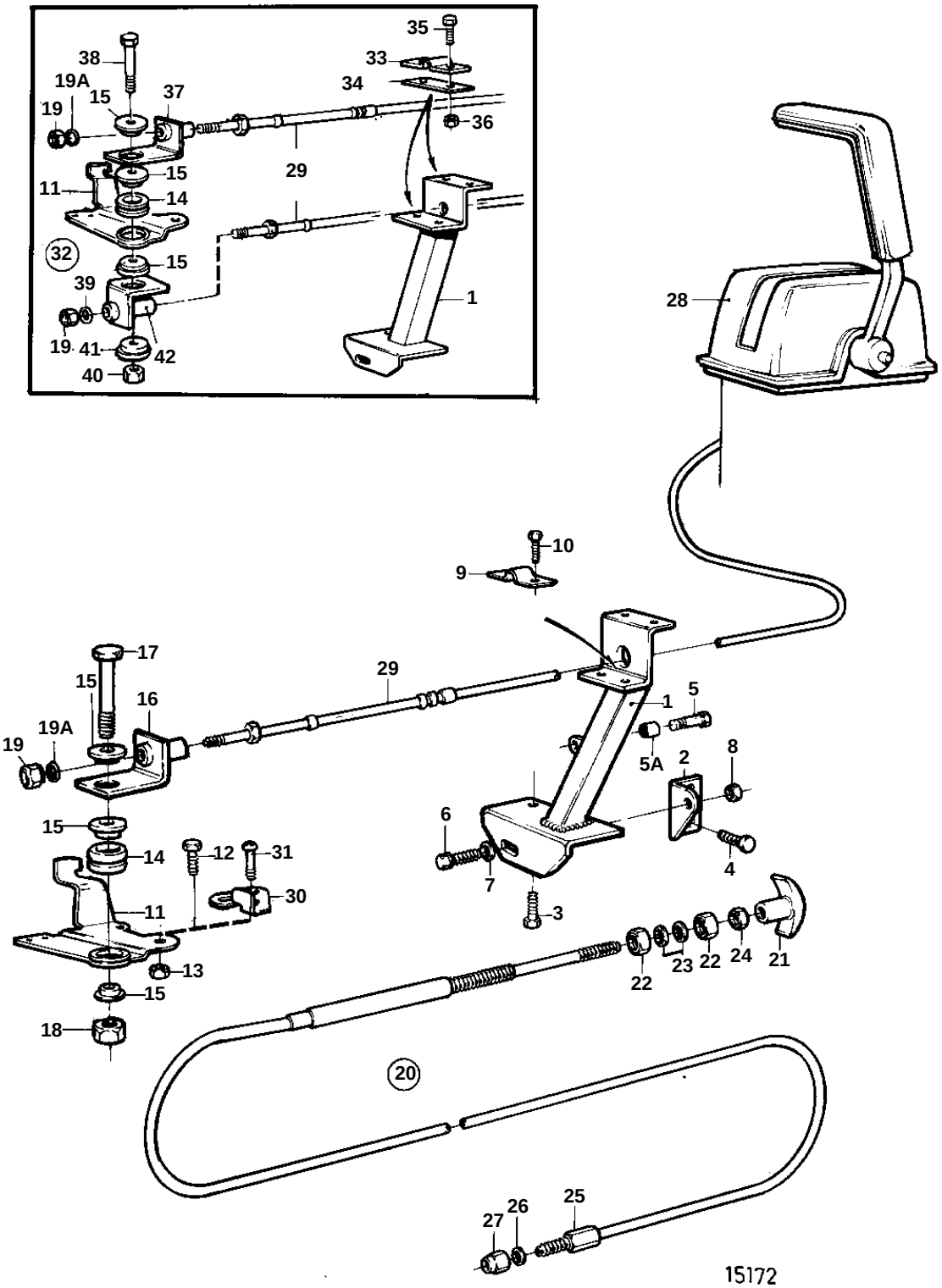

KAMD42P-A, KAD42P-A

REF	PART NO.	QTY	DESCRIPTION		NOTES
1	838783	1	Bracket		
2	838753	1	Bracket		
3	946471	1	Screw		L=16mm
	946441	1	Screw		L=20mm
4	946440	2	Flange screw		
5	947542	1	Screw		
5A		1	Spacer sleeve		
6	945444	1	Flange screw		
7	191172	1	Washer		
8	948645	1	Lock nut		
9	819067	1	Brace		
10	956078	2	Screw		
11	858261	1	Lever		
12	946544	1	Flange screw		
13	949278	1	Lock nut		
14	843109	1	Bushing		
15	843105	3	Spacer washer		
16	843107	1	Anchorage		
17	955274	1	Screw		
18	949278	1	Lock nut		
19	951674	1	Lock nut		
19A	955971	1	O-ring		
20	818478	1	Control		L=3,3mm
	818470	1	Control cable		L=6,9mm
21	829241	1	· Handle		
22	955857	2	· Nut		
23	955950	2	· Lock washer		
24	955844	1	· Nut		
25	829070	1	Cable lock		
26	955894	2	Washer		
27	950363	1	Nut		
28		X	Control		
29		X	Control cable		
30	860959	1	Stop, shoulder		
31	956094	1	Screw		