KAMD42A,KAD42A

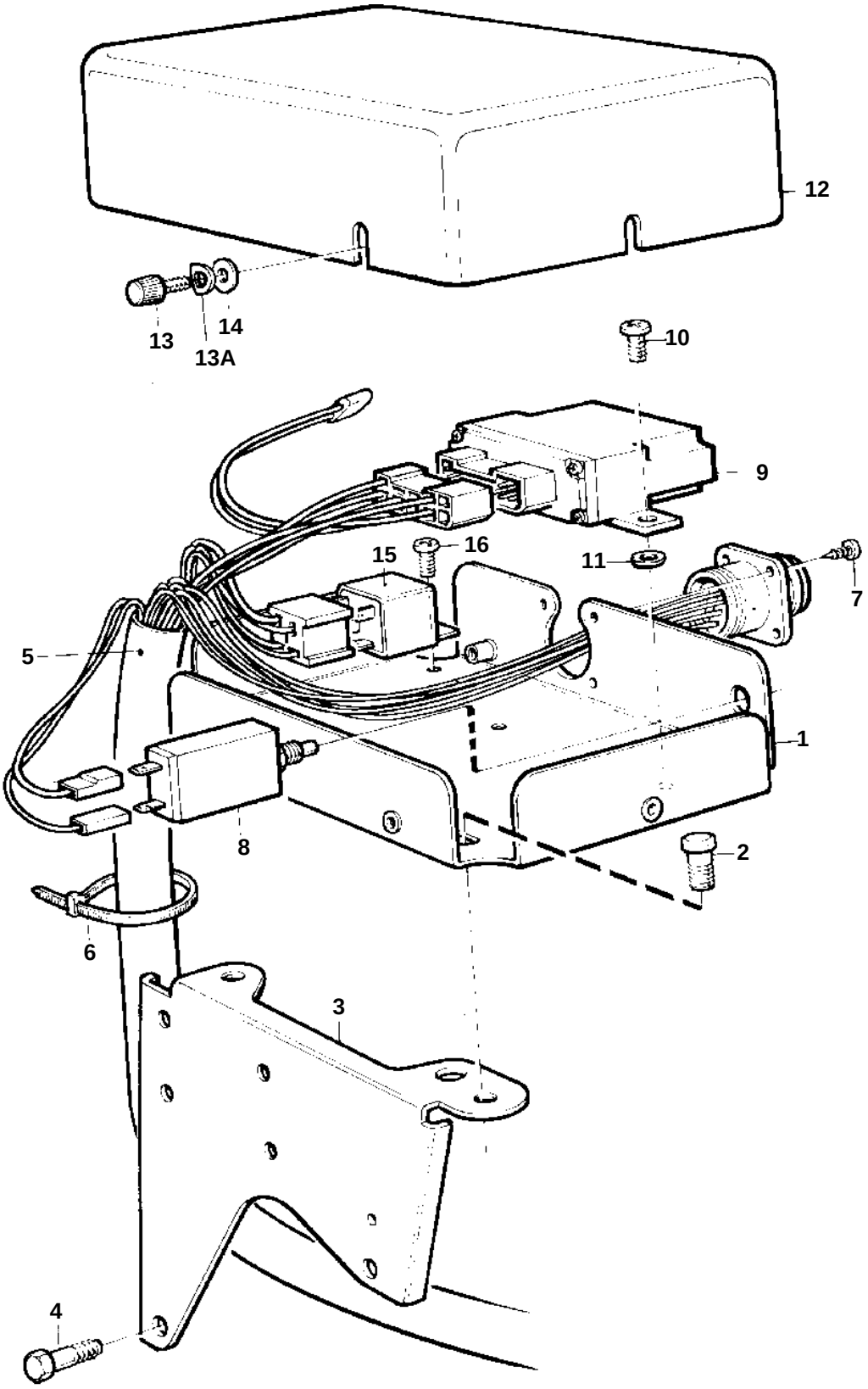


11320

KAMD42A,KAD42A

| REF | PART NO. | QTY | DESCRIPTION | | NOTES |
|---|---|---|---|---|---|
| 1 | 860417 | 1 | Bracket | | |
| 2 | 965175 | 2 | Screw | | |
| 3 | 860611 | 1 | Bracket | | |
| 4 | 947760 | 1 | Flange screw | | L = 40 MM |
| | 948217 | 1 | Flange screw | | L = 45 MM |
| 5 | 860418 | 1 | Cable trunk | | SN-2204202416 |
| | 872617 | 1 | Wiring harness | | SN2204202417- |
| 6 | 948210 | X | Strip clamp | | |
| 7 | 955119 | 4 | Screw | | |
| 8 | 966689 | 1 | Fuse | | |
| 9 | 860434 | 1 | Relay, REVOLUTION | | SN-2204202416 |
| | 872616 | 1 | Relay, REVOLUTION | | SN2204202417- |
| 10 | 955138 | 2 | Screw | | |
| 11 | 955893 | 1 | Washer | | LATE TYPE |
| 12 | 860779 | 1 | Cover | | |
| 13 | 846736 | 3 | Lock screw | | |
| 13A | 941904 | 3 | Spring washer | | |
| 14 | 960137 | 3 | Washer | | |
| 15 | 860339 | 2 | Relay | | 12V 50A |
| 16 | 955138 | 2 | Screw | | |