KAD32P-A, TAMD42WJ-A, KAMD43P-A, KAD43P-A, KAMD44P-A, KAD44P-A, KAMD44P-B, KAD44P-B, KAMD44P-C, KAD44P-C, KAMD300-A, KAD300-A

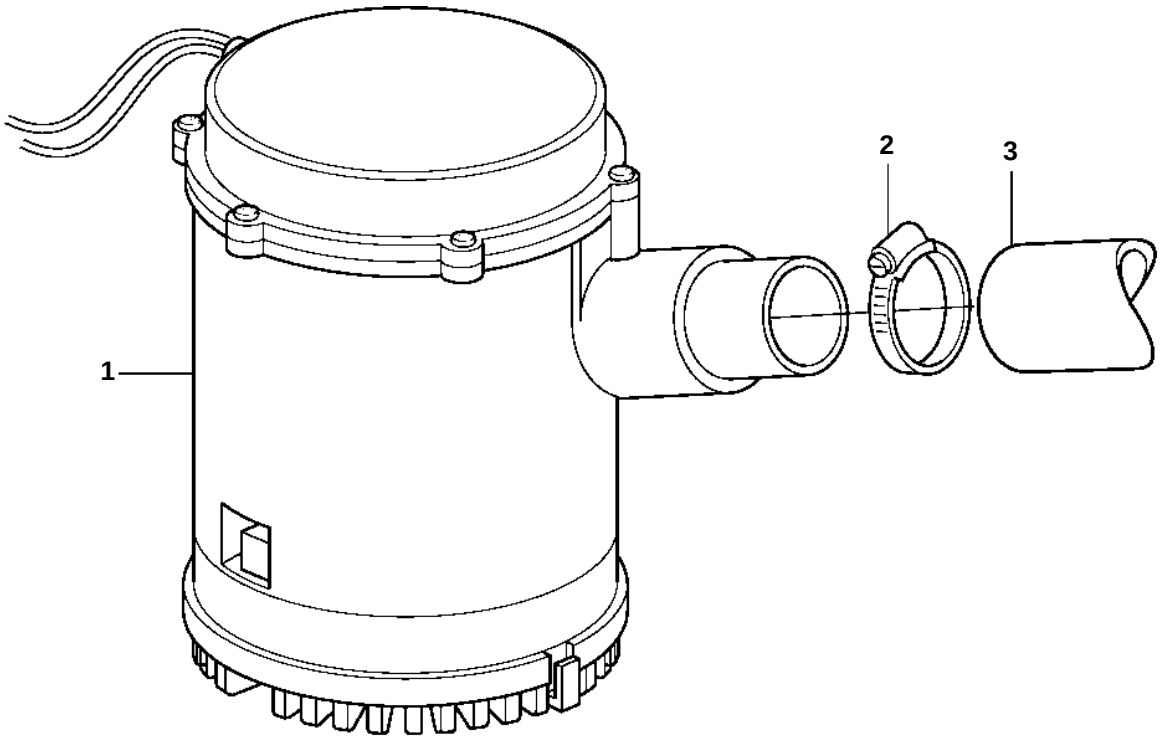

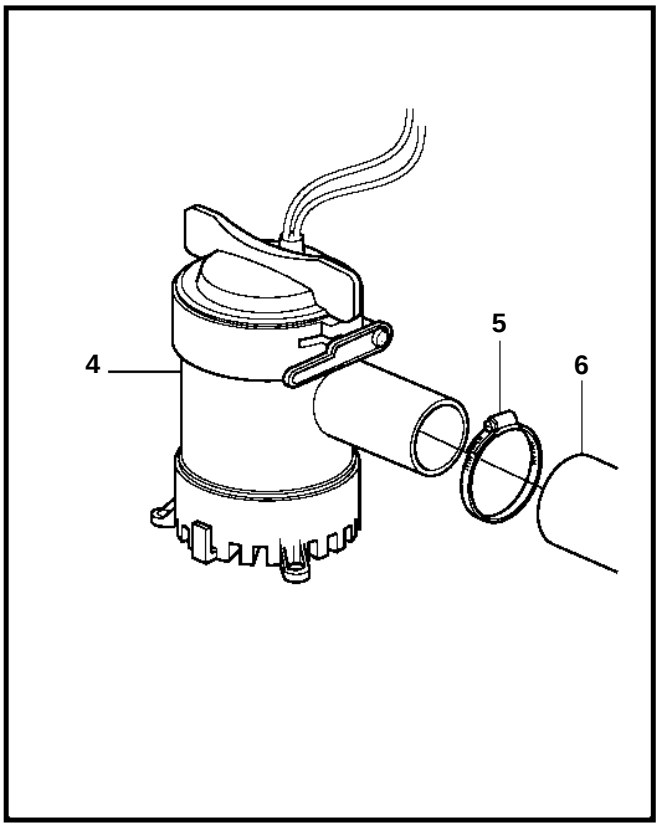

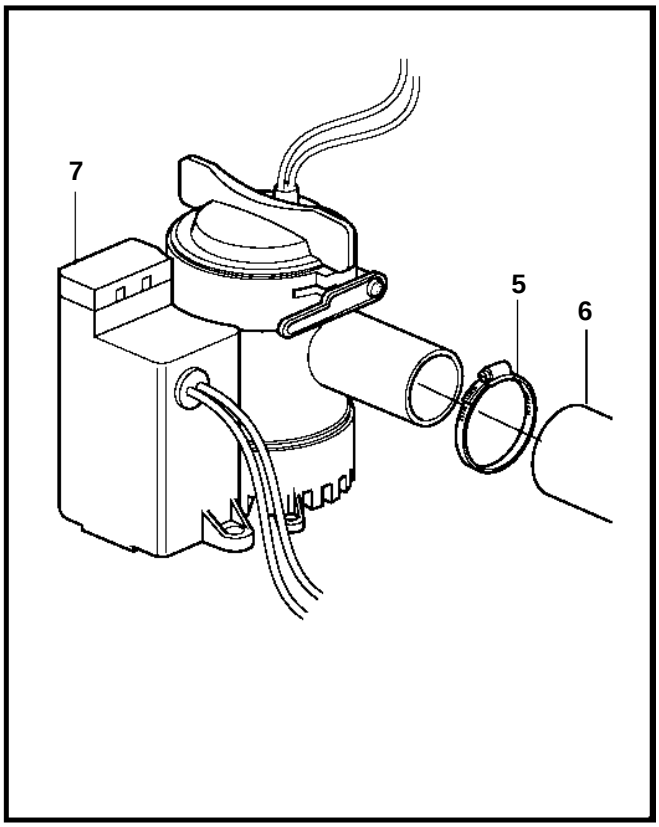

18515

KAD32P-A, TAMD42WJ-A, KAMD43P-A, KAD43P-A, KAMD44P-A, KAD44P-A, KAMD44P-B, KAD44P-B, KAMD44P-C, KAD44P-C, KAMD300-A, KAD300-A

REF	PART NO.	QTY	DESCRIPTION		NOTES
4	41100000	1	Bilge pump		30L / min 12V
	41103000	1	Bilge pump		45L / min 12V
	41103001	1	Bilge pump		55L / min 12V
	41103002	1	Bilge pump		65L / min 12V
	41103003	1	Bilge pump		75L / min 12V
5	961666	1	Hose clamp		I.D=29mm
6	192358	1	Rubber hose		I.D=19mm