KAD32P-A, TAMD42WJ-A, KAMD43P-A, KAD43P-A, KAMD44P-A, KAD44P-A, KAMD44P-B, KAD44P-B, KAMD44P-C, KAD44P-C, KAMD300-A, KAD300-A

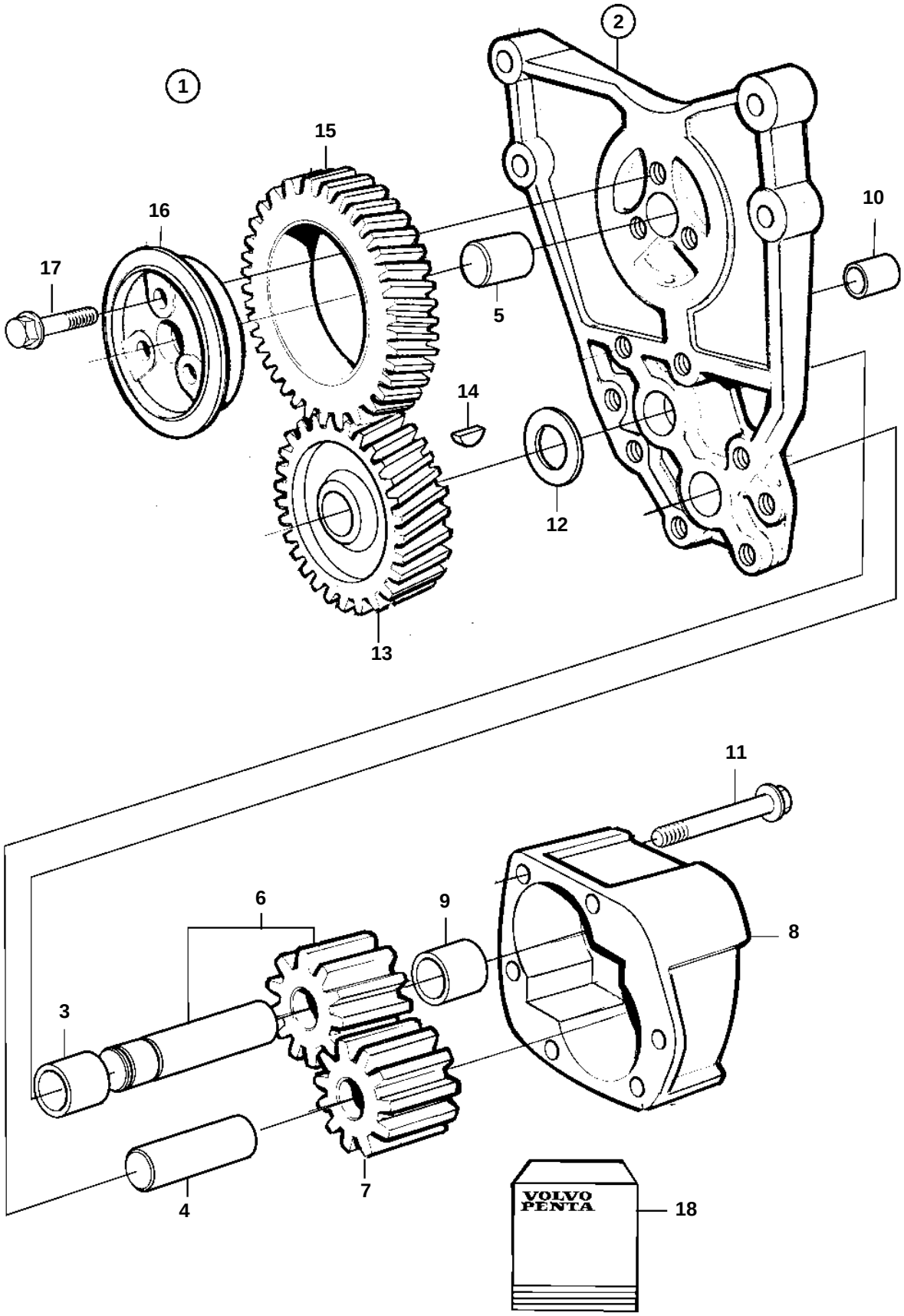

18183

KAD32P-A, TAMD42WJ-A, KAMD43P-A, KAD43P-A, KAMD44P-A, KAD44P-A, KAMD44P-B, KAD44P-B, KAMD44P-C, KAD44P-C, KAMD300-A, KAD300-A

REF	PART NO.	QTY	DESCRIPTION		NOTES
1	860721	1	Oil pump		
2	1542211	1	· Bracket		
3	470234	1	· · Bushing		
4	420043	1	· · Pivot pin		
5		1	· · Pin		
6	860722	1	· Shaft, with gear		
7	425185	1	· Gear		
8		1	· Housing		
9	401146	2	· Guide sleeve		
10	470234	1	· Bushing		
11	973924	2	· Flange screw		
12	424133	1	· Washer		
13	1542214	1	· Gear		
14	910115	1	· Key		
15	1542215	1	· Gear		
16	1542218	1	· Bearing sleeve		
17	946470	3	· Flange screw		
18	276166	1	Oil pump kit		SEE GROUP 99