TAMD42WJ-A, KAMD43P-A, KAD43P-A, KAMD44P-A, KAD44P-A, KAMD44P-B, KAD44P-B, KAMD44P-C, KAD44P-C, KAMD300-A, KAD300-A

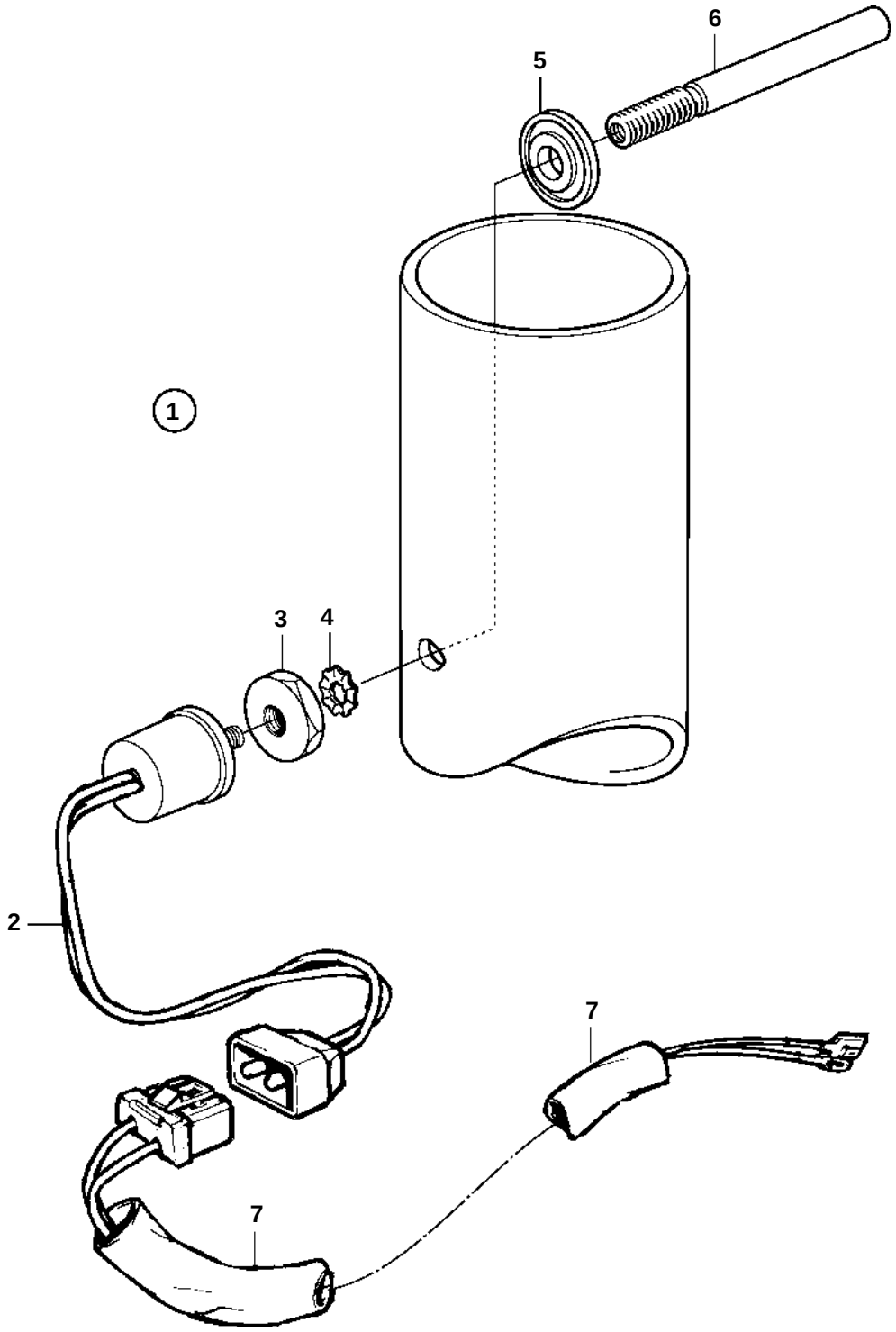

18308

TAMD42WJ-A, KAMD43P-A, KAD43P-A, KAMD44P-A, KAD44P-A, KAMD44P-B, KAD44P-B, KAMD44P-C, KAD44P-C, KAMD300-A, KAD300-A

REF	PART NO.	QTY	DESCRIPTION		NOTES
1	872313	1	Temperat monitor kit		For engines with reverse gear.
2	828761	1	· Thermo monitor		80°C
3	828750	1	· Nut		
4	942605	1	· Lock washer		
5	828776	1	· Washer		
6	828817	1	· Sensor		
7		X	· Cables and terminals		SE GROUP 30