KAD32P-A, TAMD42WJ-A, KAMD43P-A, KAD43P-A, KAMD44P-A, KAD44P-A, KAMD44P-B, KAD44P-B, KAMD44P-C, KAD44P-C, KAMD300-A, KAD300-A

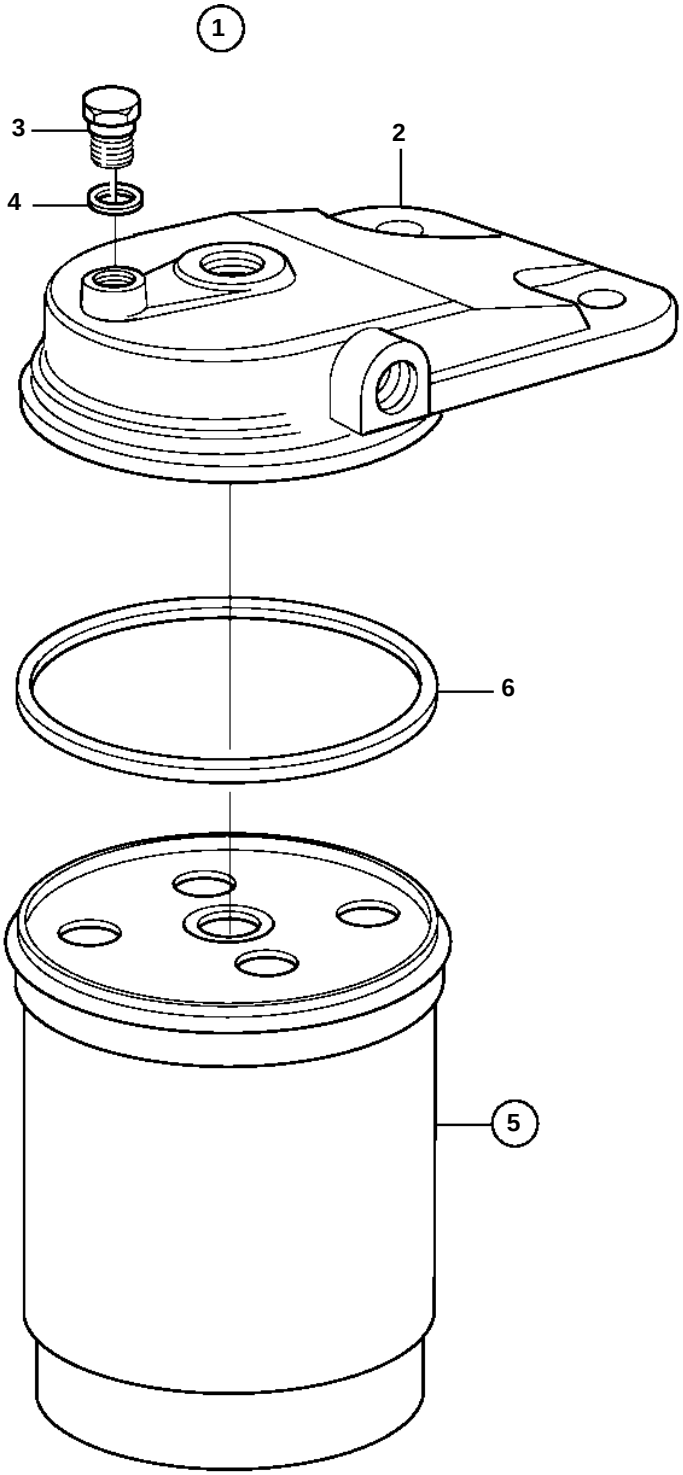

18229

KAD32P-A, TAMD42WJ-A, KAMD43P-A, KAD43P-A, KAMD44P-A, KAD44P-A, KAMD44P-B, KAD44P-B, KAMD44P-C, KAD44P-C, KAMD300-A, KAD300-A

REF	PART NO.	QTY	DESCRIPTION		NOTES
1	840531	1	Fuel filter		
2		1	· Cover		
3	240664	1	· Screw		
4	25534	1	· Gasket		
5	3825133	1	· Fuel filter		(829993)
6		1	· · Gasket		