KAMD44P-A, KAD44P-A

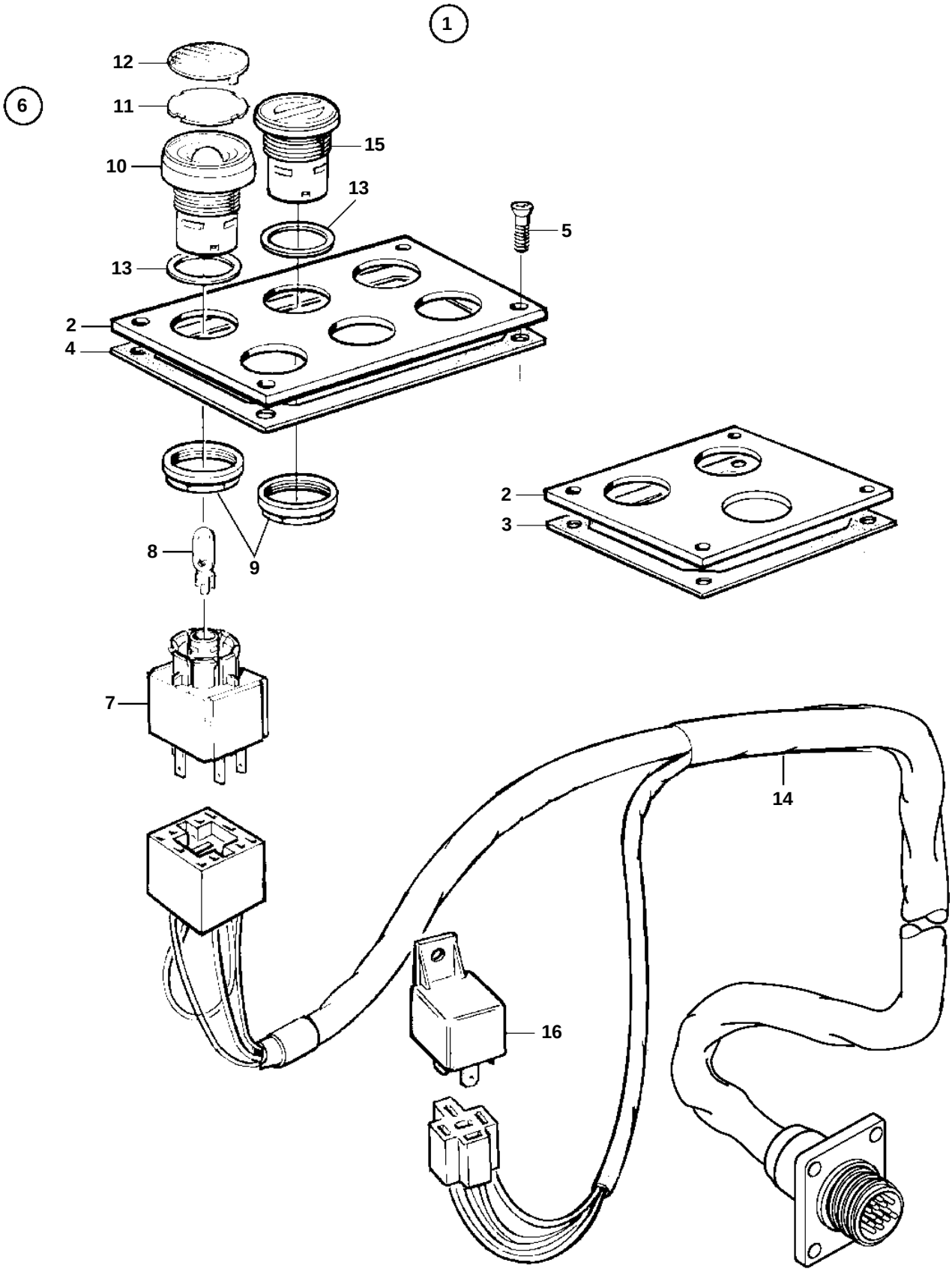

KAMD44P-A, KAD44P-A

REF	PART NO.	QTY	DESCRIPTION		NOTES
1		1	Control panel		6 HOLE. Twin engine installation. For single or multi stations.. NB! Also avaible as 2x8-pole system.. Round 16-pole connection.
2	873733	1	· Plate		6 HOLE. Twin engine installation. For single or multi stations.
4	873735	1	· Gasket		
5	828647	4	· Screw		
6	876950	6	· Push button		SPARE PART DESIGN
7		6	· · Connector unit		
8	942327	6	· · Bulb		12V, 1,2W
	943638	6	· · Bulb		24V, 1,2W
9		6	· · Attaching ring		
10		6	· · Button		
11		36	· · Symbol strip		
12		6	· · Cover plate		GREEN
		6	· · Cover plate		YELLOW
		6	· · Cover plate		RED
		6	· · Cover plate		BLUE
13		6	· · Gasket		
14	873732	1	· Cable kit		Round 16-pole connection.
15	873750	X	· Plastic plug		
16	1324492	1	· Relay		12V