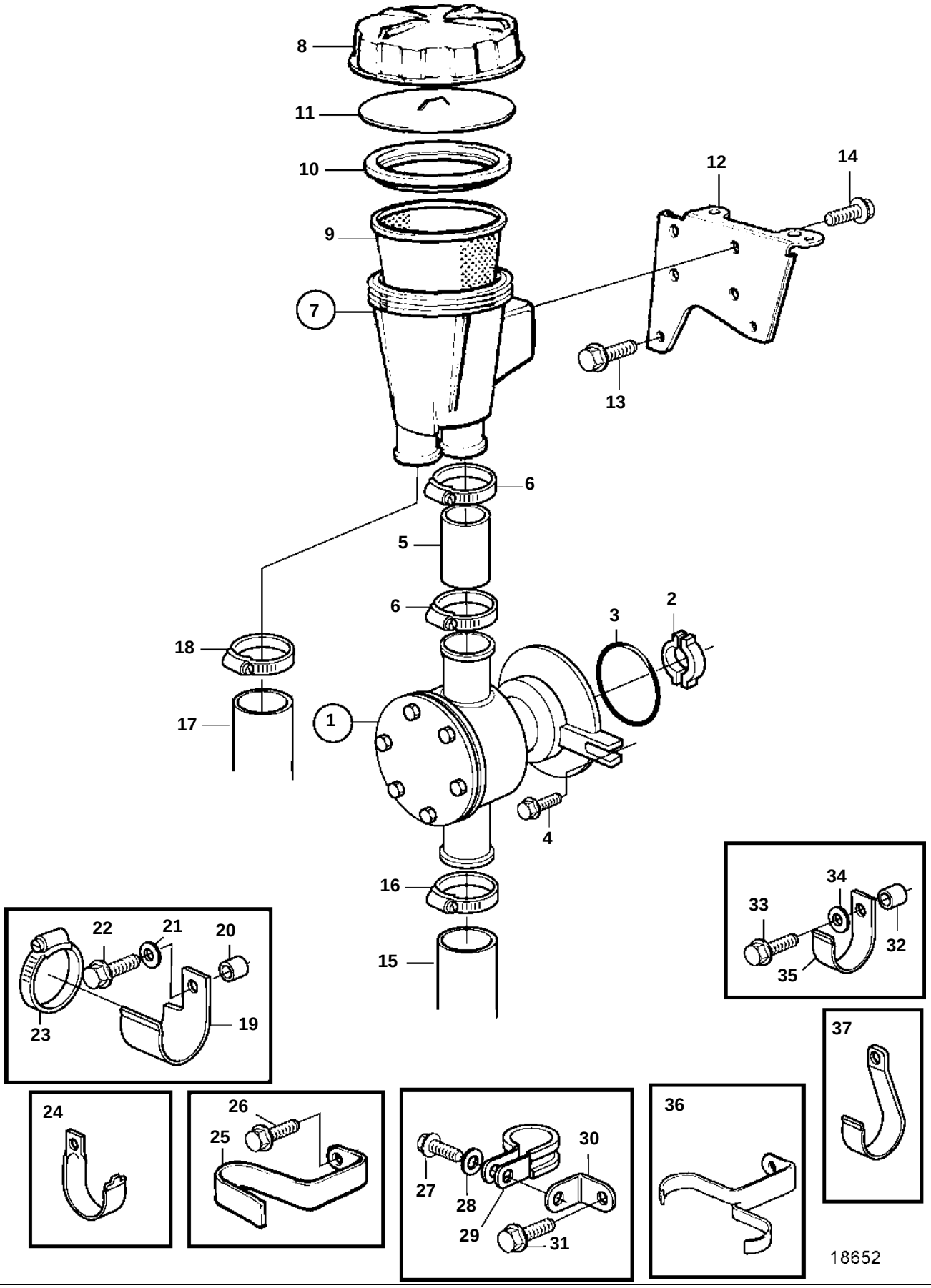
8
11
10
9
7
12
14
13
6
5
6
3
2
18
17
1
4
16
15
22
21
20
23
19
34
33
32
35
37
24
26
25
27
28
29
30
31
36
18652

REF	PART NO.	QTY	DESCRIPTION		SEE SEC.	NOTES
1	3581558	1	Sea water pump			REPL BY 3583115
					3400	
	3583115	1	Sea water pump			
					3400	
2	858467	1	Companion flange			
3	968971	1	O-ring			
4	945444	2	Flange screw			
5	949315	1	Hose			L=60mm
6	943476	2	Hose clamp			
7	860631	1	Sea water filter			
8	842722	1	· Cover			
9	860687	1	· Strainer			
10	842724	1	· Seal			
11	842982	1	· Pressure plate			
12	3581530	1	Bracket			
13	946470	1	Flange screw			L=35mm
	948217	1	Flange screw			L=45mm
14	944926	4	Flange screw			
15	861738	1	Hose			Intake-sea water pump.
16	961669	2	Hose clamp			
17	861018	1	Hose			Sea water filter-oil cooler.
18	943476	1	Hose clamp			
19	3580758	1	Bracket			
20	843075	1	Sleeve			
21	955894	1	Washer			
22	945444	1	Flange screw			
23	961669	1	Hose clamp			
24	834974	1	Clamp			
25	861387	1	Bracket			
26	947760	1	Flange screw			
27	948746	1	Flange screw			(968855)
28	955893	1	Washer			
29	952640	1	Clamp			
30	846780	1	Bracket			
31	965181	1	Screw			
32	843075	1	Sleeve, inlet			L=16mm
33	946671	1	Flange screw			L=30mm
34	955894	1	Washer			
35	857045	1	Clamp			