KAD32P-A, TAMD42WJ-A, KAMD43P-A, KAD43P-A

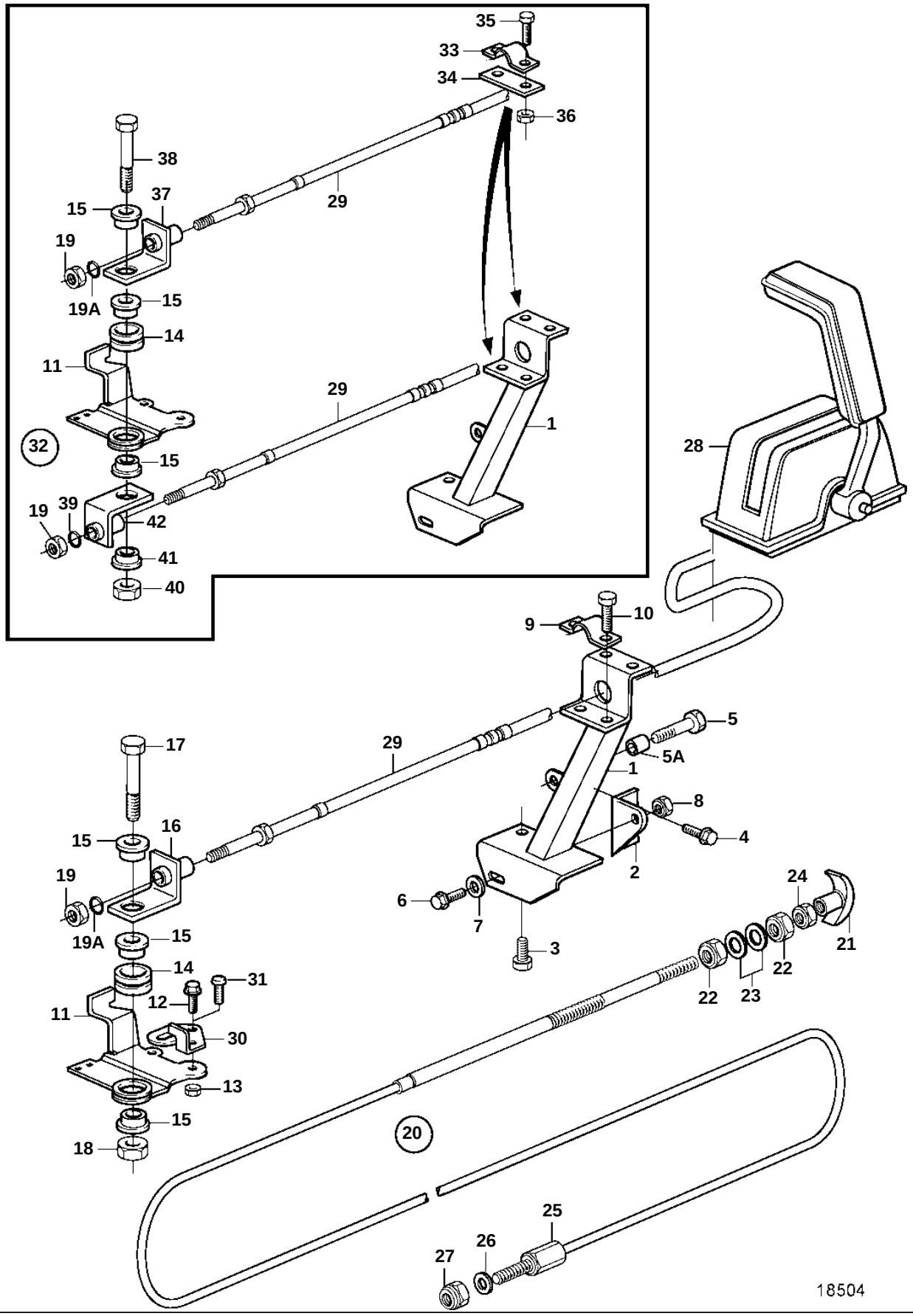

KAD32P-A, TAMD42WJ-A, KAMD43P-A, KAD43P-A

REF	PART NO.	QTY	DESCRIPTION		SEE SEC.	NOTES
1	838783	1	Bracket			
2	838753	1	Bracket			
3	946471	1	Screw			L=16mm
	946441	1	Screw			L=20mm
4	946440	2	Flange screw			
5	947542	1	Screw			
5A		1	Spacer sleeve			
6	945444	1	Flange screw			
7	191172	1	Washer			
8	948645	1	Lock nut			
9	819067	1	Brace			
10	969407	2	Screw			(956078)
11	858261	1	Lever			
12	946544	1	Flange screw			
13	949278	1	Lock nut			
14	843109	1	Bushing			
15	843105	3	Spacer washer			
19	951674	2	Lock nut			
19A	955971	1	O-ring			
20	818478	1	Control			L=3,3mm
	818470	1	Control cable			L=6,9mm
21	829241	1	· Handle			
22	955857	2	· Nut			
23	955950	2	· Lock washer			
24	955844	1	· Nut			
25	829070	1	Cable lock			
26	955894	2	Washer			
27	950363	1	Nut			
28		X	Control			
29		X	Control cable		231	
30	860959	1	Stop, shoulder			
31	955271	1	Screw			(956094)
32	3581042	1	Ds unit			(861221)
33	819067	1	· Brace			
34	819068	1	· Washer			
35	969407	2	· Screw			(956078)
36	951674	2	· Lock nut			
37	861215	1	· Bracket			
38	955275	1	· Screw			
39	955971	1	· O-ring			
40	946035	1	· Lock nut			
41	843105	2	· Spacer washer			
42	861214	1	· Bracket			