D65A-MT

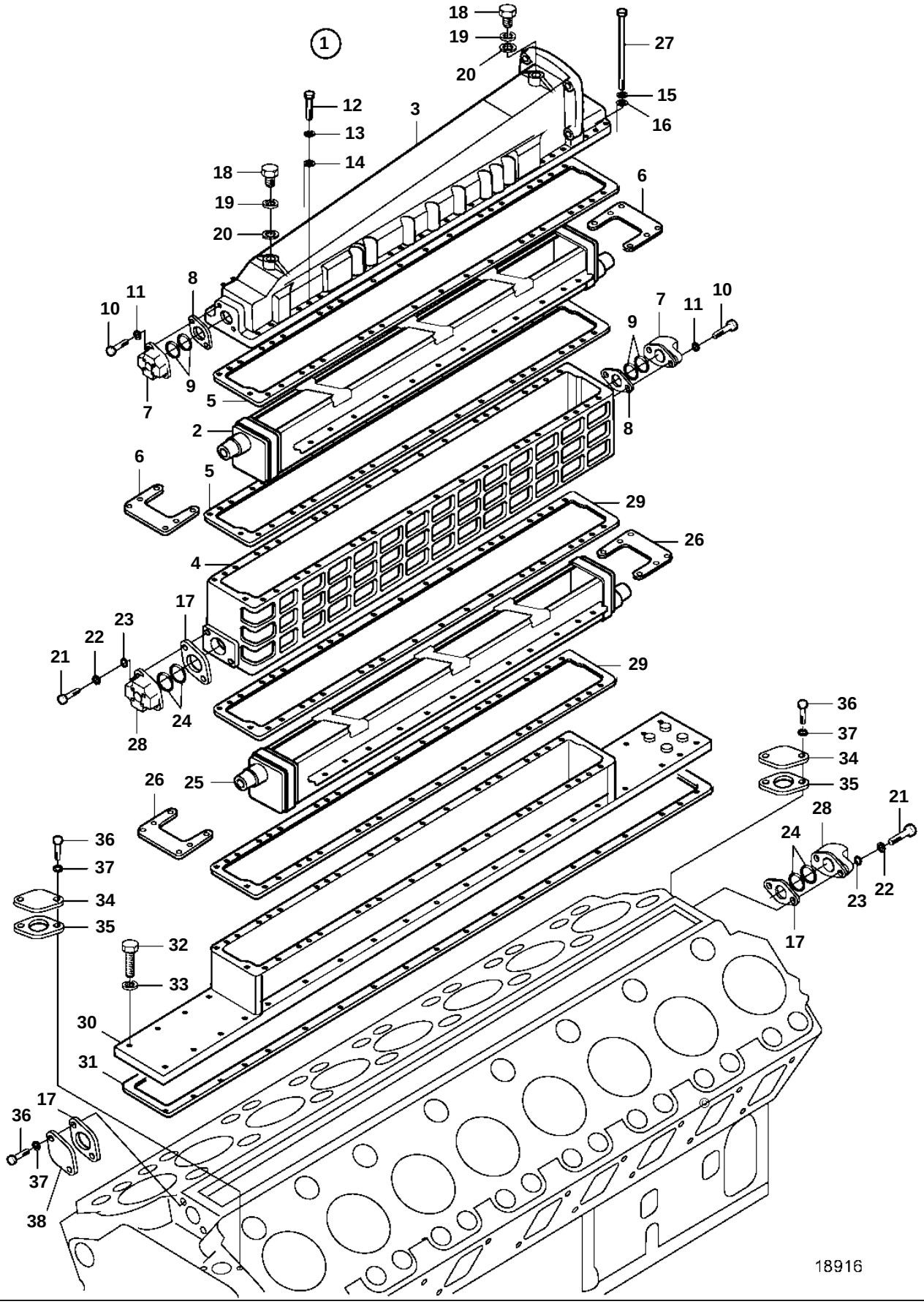
18
19
20
1
27
12
13
14
3
15
16
18
19
20
6
8
11
10
7
11
10
9
9
7
5
8
2
6
5
29
26
4
17
23
22
21
29
24
28
36
37
34
35
26
25
21
28
24
36
37
34
35
23
22
32
33
17
30
31
17
36
37
38
18916

D65A-MT

REF	PART NO.	QTY	DESCRIPTION	
1		1	Intercooler	
2	3833462	1	· Insert	
3	3833344	1	· Cover	
4	3833136	1	· Housing	
5	3833546	2	· Gasket	
6	3834221	2	· Plate	
7	3833273	2	· Connector	
8	3833538	2	· Gasket	
9	3831924	4	· O-ring	
10	3832045	4	· Screw	
11	3832233	4	· Spring washer	
12	3831583	12	· Screw	
13	3832233	12	· Spring washer	
14	3832214	12	· Washer	
15	3832233	30	Spring washer	
16	3832214	30	Washer	
17	3835059	3	Gasket	
18	3832058	2	Screw	
19	3832245	2	Spring washer	
20	3832218	2	Washer	
21	3832045	2	Screw	
22	3832233	2	Spring washer	
23	3832214	2	Washer	
24	3831924	4	O-ring	
25	3833462	1	Insert	
26	3834221	2	Plate	
27	3832202	30	Screw	
28	3833273	2	Connector	
29	3833545	2	Gasket	
30	3834638	1	Spacer	
31	3833564	1	Gasket	
32	3832045	40	Screw	
33	3832233	40	Spring washer	
34	3833330	2	Cover	
35	3835436	2	Gasket	
36	3832056	6	Screw	
37	3832245	6	Spring washer	
38	3831747	1	Cover	