D7A-A T, D7A-A TA, D7C-A TA

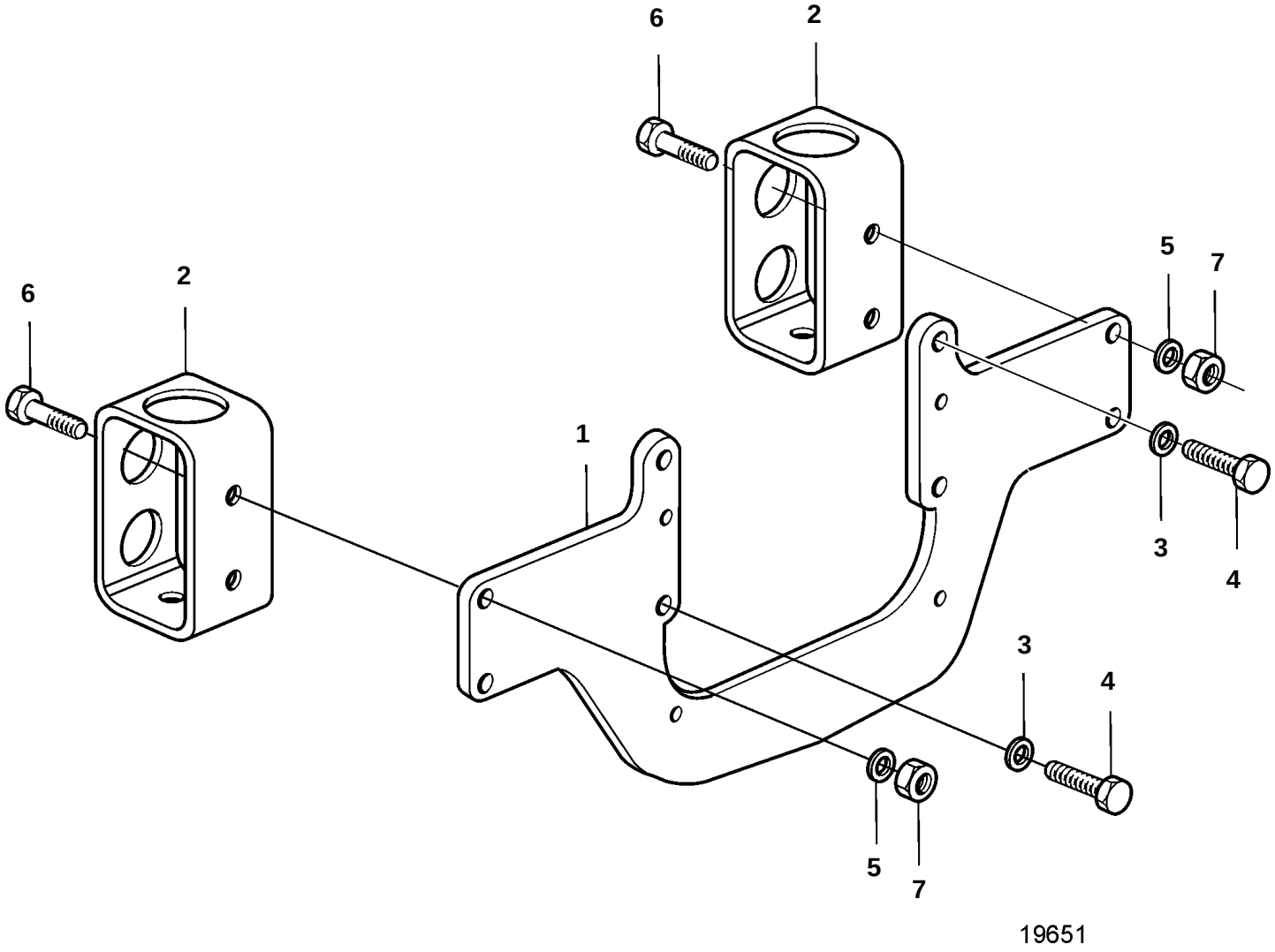

D7A-A T, D7A-A TA, D7C-A TA

REF	PART NO.	QTY	DESCRIPTION		NOTES
1	3839540	1	Engine bracket		
2	3839541	2	Engine bracket		
3	20405606	4	Washer		
4	20535027	4	Screw		
5	20460513	4	Washer		
6		4	Flange screw		20551469. As spare part: 20551469
7		4	Flange nut		20522497. As spare part: : 20522497