D7C-B TA, D7C-A TA

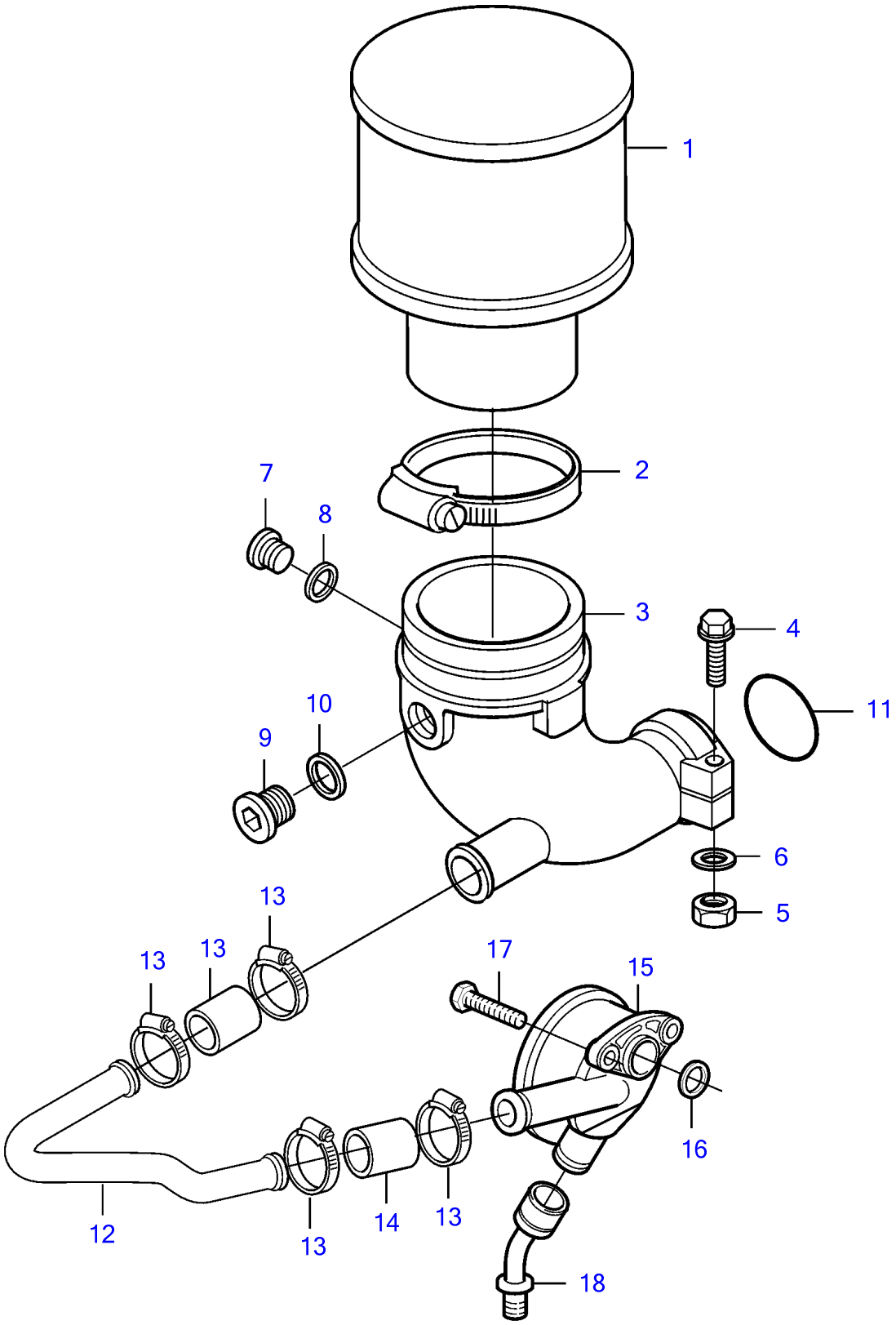

19799

D7C-B TA, D7C-A TA

REF	PART NO.	QTY	DESCRIPTION
1	20483100	1	Air filter
2	888791	1	Hose clamp
3	888812	1	Elbow
4	11700269	2	Screw
5	945408	2	Flange nut
6	20460127	2	Washer
7	20450895	1	Plug
8	947281	1	Gasket
9	20459195	1	Plug
10	957189	1	Gasket
11	888889	1	Sealing ring
12	888813	1	Connection pipe
13	20405755	4	Hose clamp
14	888814	2	Connection hose
15	20412322	1	Oil separator
16	20405943	1	Gasket
17	20450728	2	Flange screw
18	20405938	1	Connector