D5A-A T, D5A-A TA, D5A-B TA

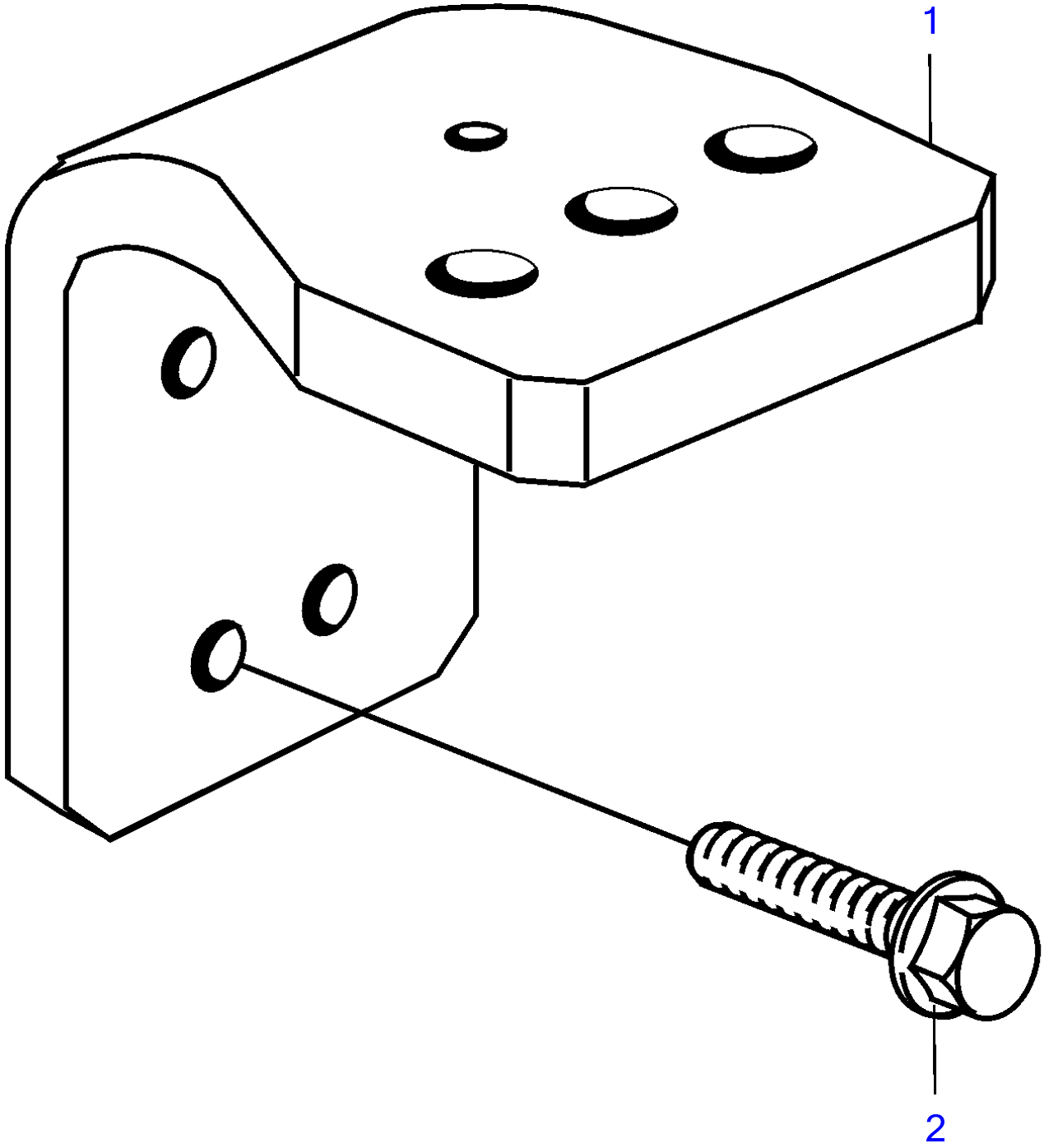

19853

D5A-A T, D5A-A TA, D5A-B TA

REF	PART NO.	QTY	DESCRIPTION	NOTES
1	3839528	2	Engine bracket	
2	977625	8	Hexagon screw	L=50mm