D49A-MT AUX, D49A-MS AUX

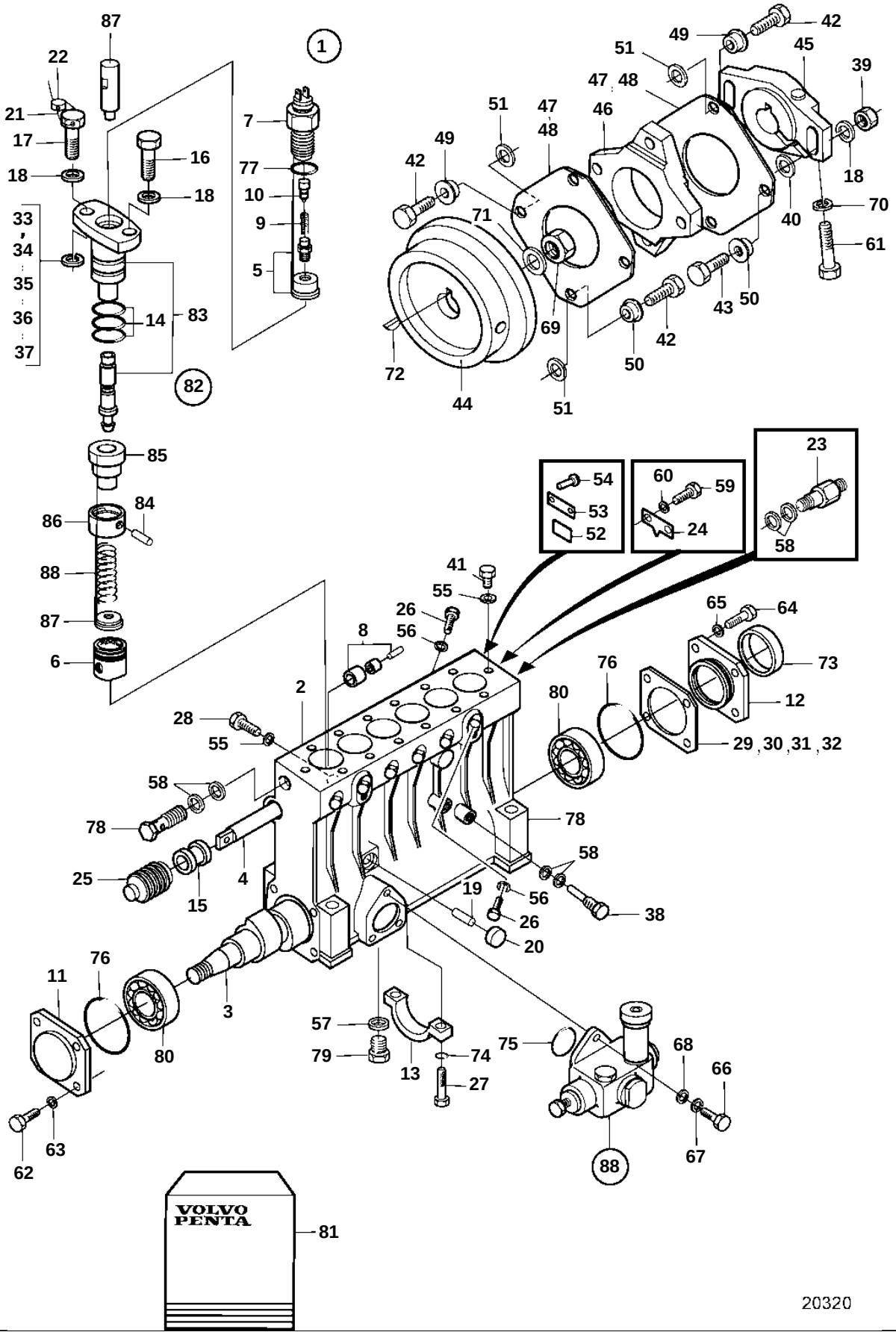

D49A-MT AUX, D49A-MS AUX

REF	PART NO.	QTY	DESCRIPTION		NOTES
1	3839378	1	Injection pump		P
2	3833152	1	· Housing		P
3	3833099	1	· Camshaft		
4	3834326	1	· Rack		
5	3838331	6	· Delivery valve		
6	3834762	6	· Tappet		
7	3833627	6	· Valve retainer		
8	3839518	6	· Tappet		

D49A-MT AUX, D49A-MS AUX

REF	PART NO.	QTY	DESCRIPTION		NOTES