Water pump: D49A-MT AUX

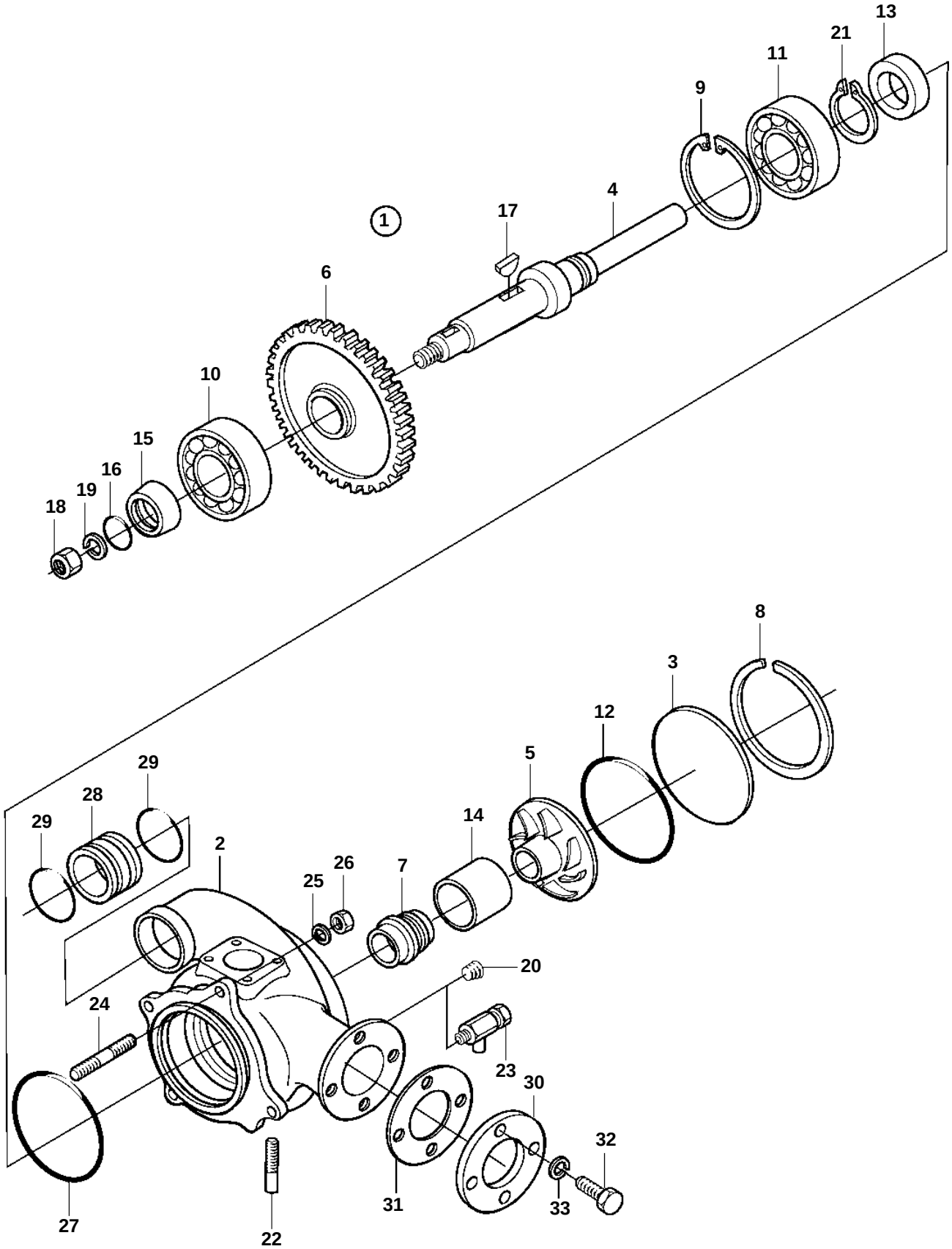

18724

REF	PART NO.	QTY	DESCRIPTION		NOTES
1	3841129	1	Circulation pump		(3834317)
2	3841130	1	· Pump housing		
3	3833407	1	· Cover		
4	3834512	1	· Pump shaft		
5	3833645	1	· Impeller		
6	3833595	1	· Gear		
7	3838186	1	· Seal		
8	3836537	1	· Snap ring		
9	3832053	1	· Snap ring		
10	3831658	1	· Bearing		
11	3831660	1	· Bearing		
12	3831986	1	· O-ring		
13	3831800	1	· Sealing ring		
14	3834346	1	· Ring		
15	3834603	1	· Sleeve		
16	3831996	1	· O-ring		
17	3832286	1	· Woodruff key		
18	3831778	1	· Lock nut		
19	3831809	1	· Spring washer		
20	3832334	1	· Plug		
21	3832028	1	· Snap ring		
22	3841131	1	· Tube		
23	3831636	1	Drain cock		
24	3834742	3	Stud		
25	3832245	3	Spring washer		
26	3832199	3	Lock nut		
27	3835580	1	O-ring		
28	3833675	1	Clutch		
29	3831984	2	O-ring		