# Thermostat House with connections: D49A-MS AUX

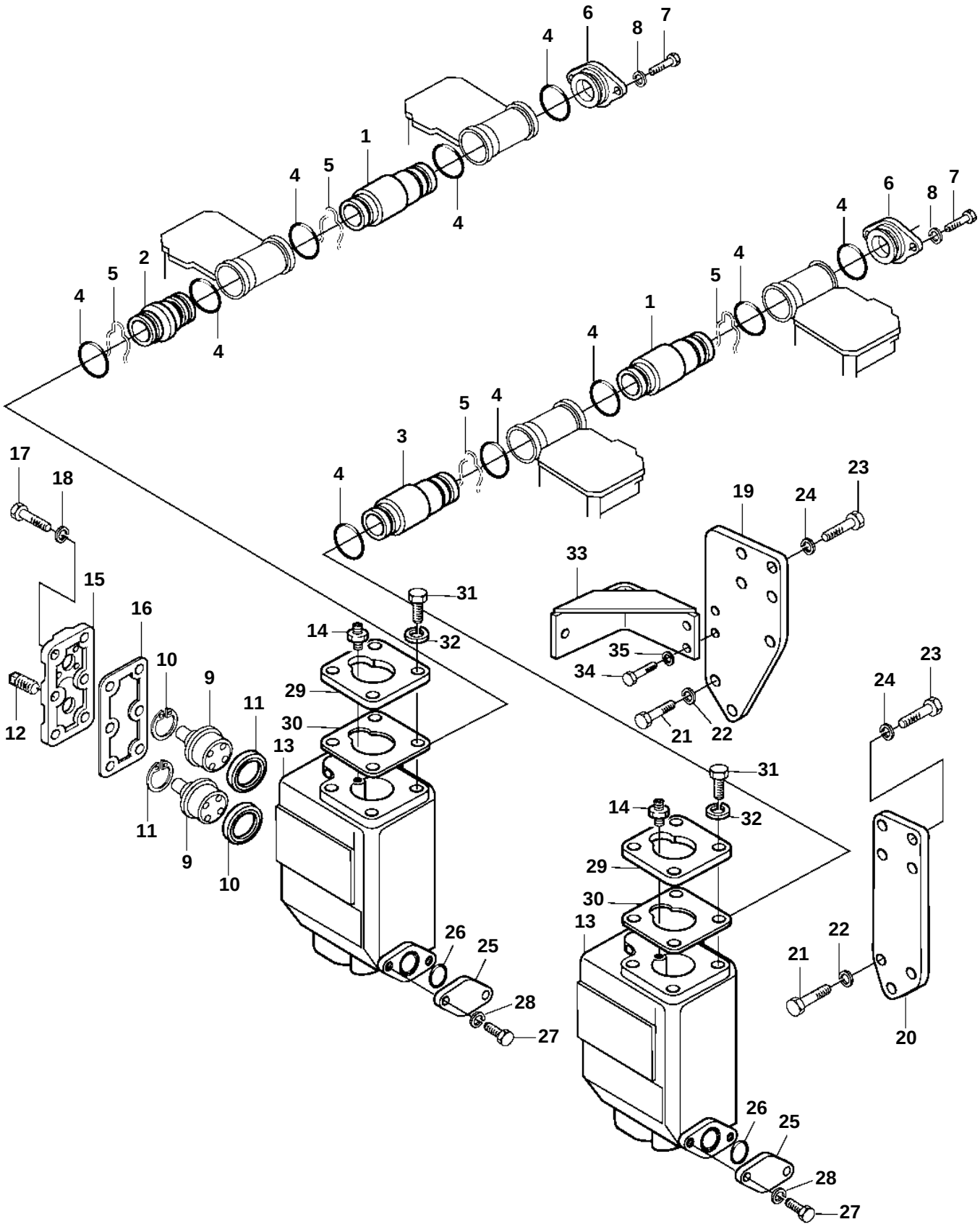


19434

| REF | PART NO. | QTY | DESCRIPTION | |
|---|---|---|---|---|
| 1 | 3833270 | 10 | Connector | |
| 2 | 3833287 | 1 | Connector, right | |
| 3 | 3833286 | 1 | Connector, left | |
| 4 | 3831870 | 26 | O-ring | |
| 5 | 3831876 | 12 | Snap ring | |
| 6 | 3839487 | 2 | Cover | |
| 7 | 3832042 | 4 | Screw | |
| 8 | 3832233 | 4 | Spring washer | |
| 9 | 3834768 | 4 | Thermostat | |
| 10 | 3834468 | 4 | Seal | |
| 11 | 3834364 | 4 | Snap ring | |
| 12 | 3836541 | 2 | Plug | |
| 13 | 3833163 | 2 | Thermostat housing | |
| 14 | 3834823 | 2 | Valve | |
| 15 | 3833404 | 2 | Cover | |
| 16 | 3838301 | 2 | Gasket | |
| 17 | 3832045 | 12 | Screw | |
| 18 | 3832233 | 12 | Spring washer | |
| 19 | 3838763 | 1 | Bracket, right | |
| 20 | 3833069 | 1 | Bracket, left | |
| 21 | 3832099 | 4 | Screw | |
| 22 | 3832282 | 6 | Spring washer | |
| 23 | 3832047 | 8 | Screw | |
| 24 | 3832233 | 8 | Spring washer | |
| 25 | 3833331 | 2 | Cover | |
| 26 | 3832288 | 2 | O-ring | |
| 27 | 3832045 | 4 | Screw | |
| 28 | 3832233 | 4 | Spring washer | |
| 29 | 3833487 | 2 | Flange | |
| 30 | 3807064 | 2 | Gasket | |
| 31 | 3832045 | 8 | Screw | |
| 32 | 3832233 | 8 | Spring washer | |