Thermostat House with connections: D49A-MT AUX

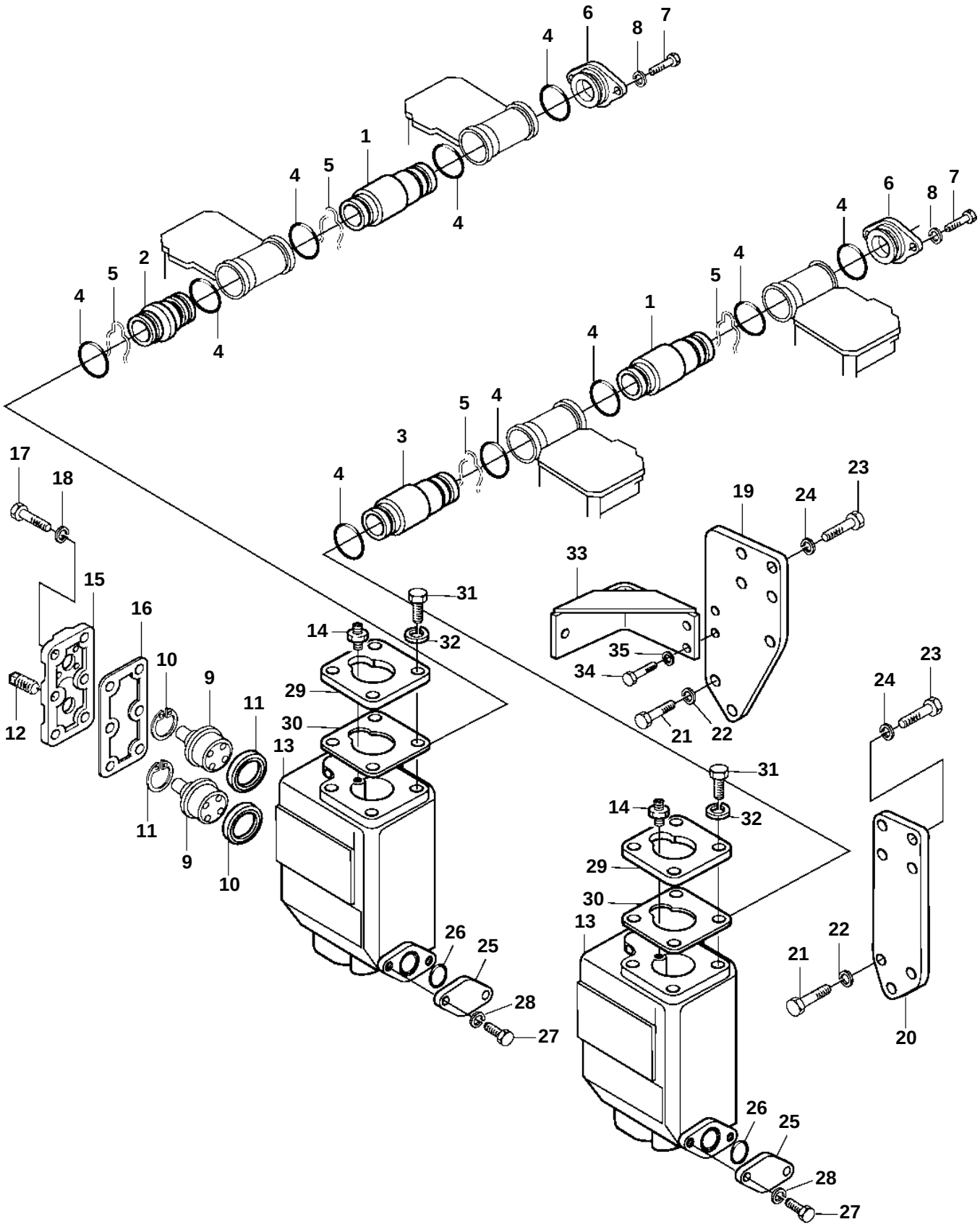

19434

REF	PART NO.	QTY	DESCRIPTION	
1	3833270	10	Connector	
2	3833287	1	Connector, right	
3	3833286	1	Connector, left	
4	3831870	26	O-ring	
5	3831876	12	Snap ring	
6	3839487	2	Cover	
7	3832042	4	Screw	
8	3832233	4	Spring washer	
9	3834768	4	Thermostat	
10	3834468	4	Seal	
11	3834364	4	Snap ring	
12	3836541	2	Plug	
13	3833163	2	Thermostat housing	
14	3834823	2	Valve	
15	3833404	2	Cover	
16	3838301	2	Gasket	
17	3832045	12	Screw	
18	3832233	12	Spring washer	
19	3838763	1	Bracket, right	
20	3833069	1	Bracket, left	
21	3832099	4	Screw	
22	3832282	6	Spring washer	
23	3832047	8	Screw	
24	3832233	8	Spring washer	
25	3833331	2	Cover	
26	3832288	2	O-ring	
27	3832045	4	Screw	
28	3832233	4	Spring washer	
33	3838753	1	Bracket	
34	3832047	2	Screw	
35	3832233	2	Spring washer	