D49A-MT AUX

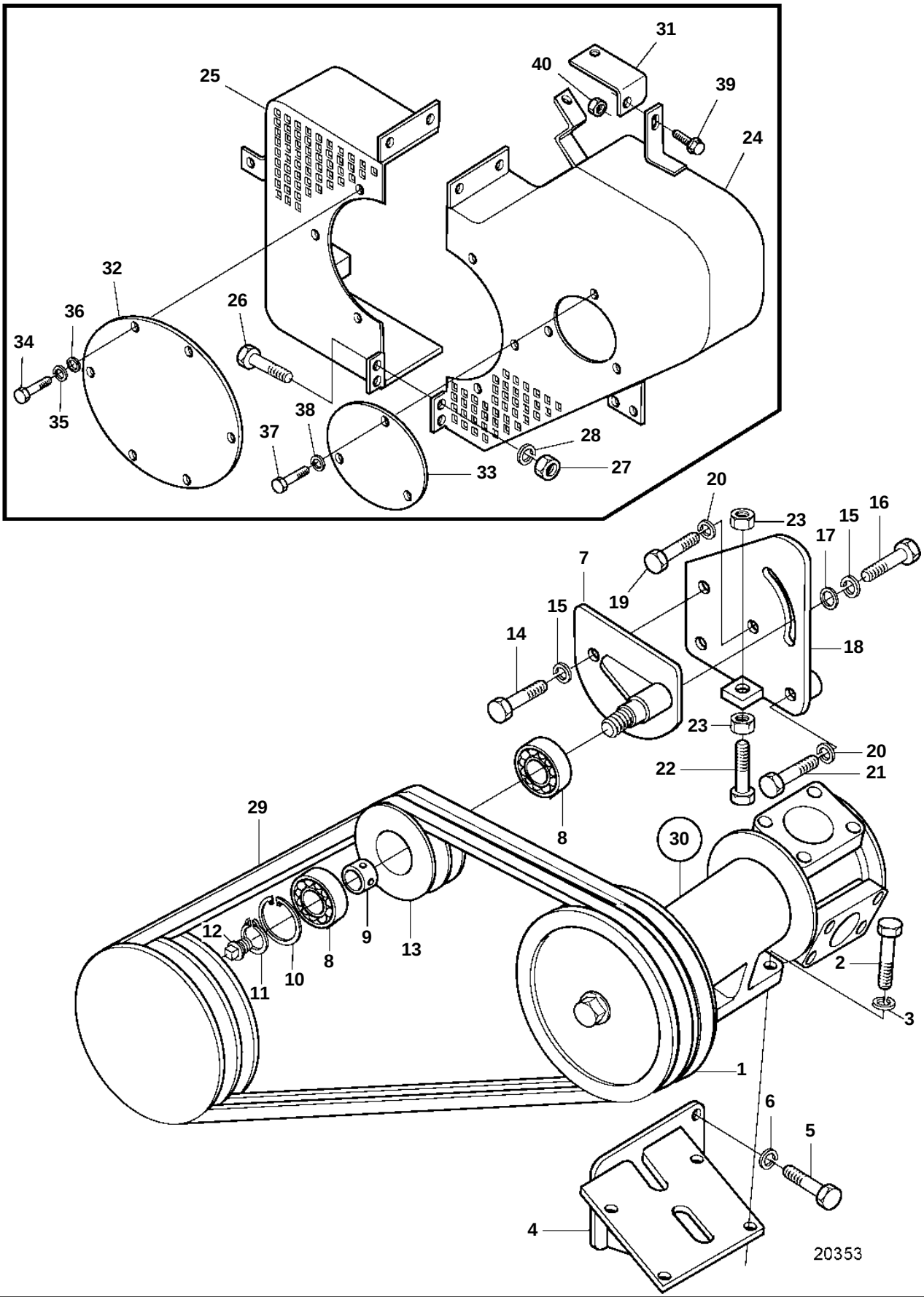
31
40
39
25
24
32
36
26
34
35
38
37
28
27
33
20
23
15
16
17
7
19
15
14
18
23
20
22
21
29
8
30
12
9
13
8
10
11
2
3
1
6
5
4
20353

D49A-MT AUX

REF	PART NO.	QTY	DESCRIPTION		SEE SEC.
1	3835699	1	Pulley		
2	3835700	4	Screw		
3	3832277	4	Spring washer		
4	3835701	1	Bracket		
5	3832063	4	Screw		
6	3832245	4	Spring washer		
7	3835702	1	Bracket		
8	3835703	2	Bearing		
9	3835707	1	Spacer		
10	3835708	1	Snap ring		
11	3832294	1	Snap ring		
12	3832336	1	Plug		
13	3835709	1	Tension pulley		
14	3832063	1	Screw		
15	3832245	3	Spring washer		
16	3832066	1	Screw		
17	3835710	1	Washer		
18	3835704	1	Bracket		
19	3835711	1	Screw		
20	3832245	3	Spring washer		
21	3835712	2	Screw		
22	3835713	1	Screw		
23	3832204	2	Nut		
24	3838776	1	Belt protector, left		
25	3835706	1	Belt protector, right		
26	3832042	4	Screw		
27	3832196	4	Lock nut		
28	3832233	4	Spring washer		
29	3837992	1	V-belt		
30	3839464	1	Sea water pump		
					4968
31	3838777	1	Stay		
32		1	Belt protector		
33	3838778	1	Belt protector		
34	3835721	6	Screw		
35	3832225	6	Spring washer		
36	3831791	6	Washer		
37	3835721	3	Screw		
38	3832225	3	Spring washer		
39		1	Screw		
40		1	Nut		