D4-180I-F, D4-225A-F, D4-225I-F, D4-260A-F, D4-260D-F, D4-260I-F, D4-300A-F, D4-300D-F, D4-300I-F

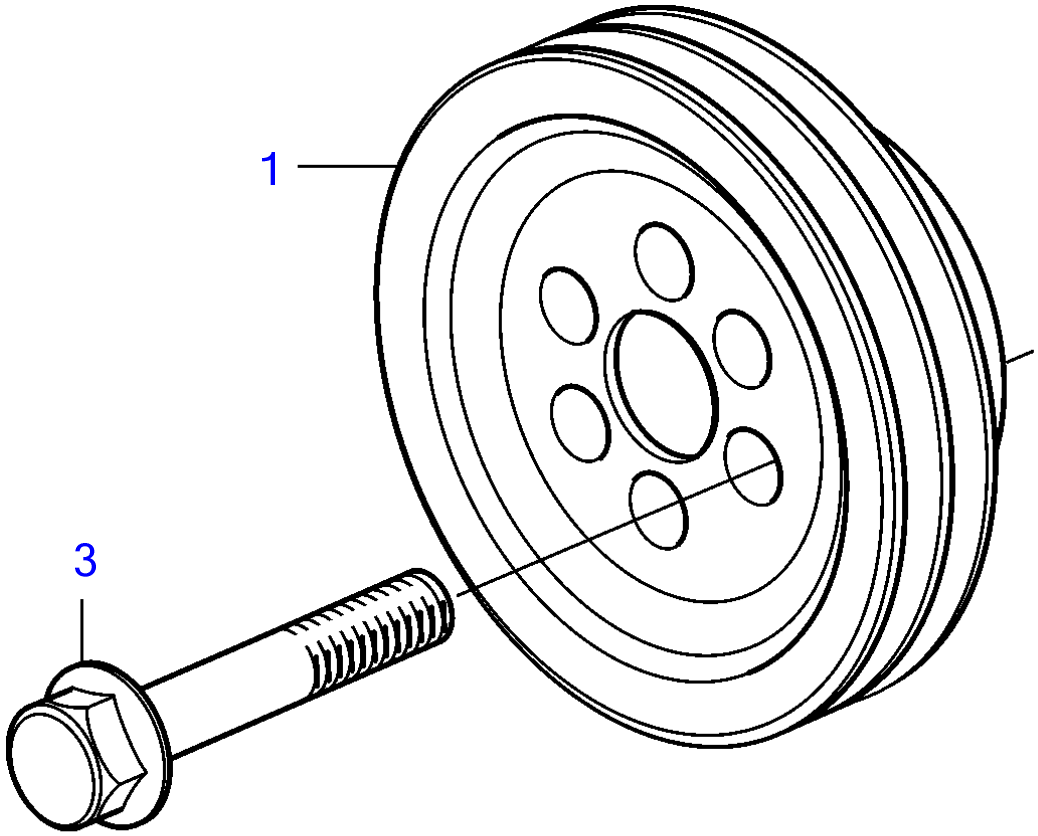

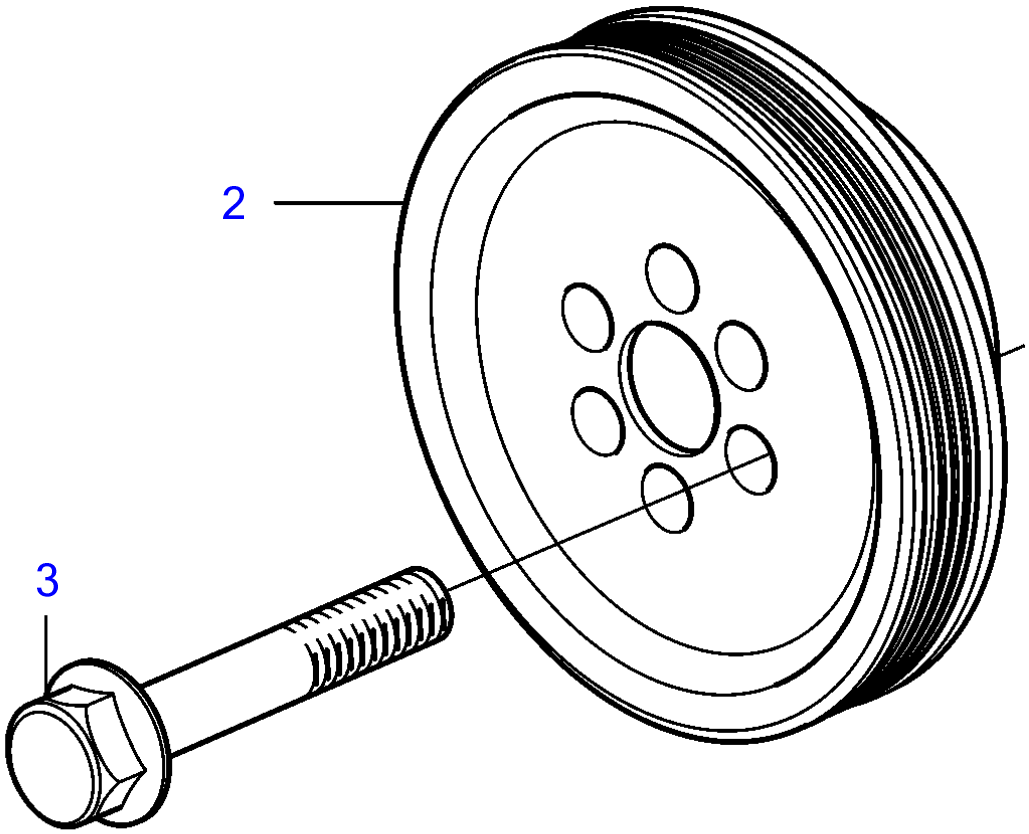

25325

D4-180I-F, D4-225A-F, D4-225I-F, D4-260A-F, D4-260D-F, D4-260I-F, D4-300A-F, D4-300D-F, D4-300I-F

REF	PART NO.	QTY	DESCRIPTION	NOTES
1	3809925	1	Pulley	For V-belt
2	3809926	1	Pulley	For multi-V-belt.
3	471540	6	Flange screw	