D4-180I-F, D4-225A-F, D4-225I-F, D4-260A-F, D4-260D-F, D4-260I-F, D4-300A-F, D4-300D-F, D4-300I-F

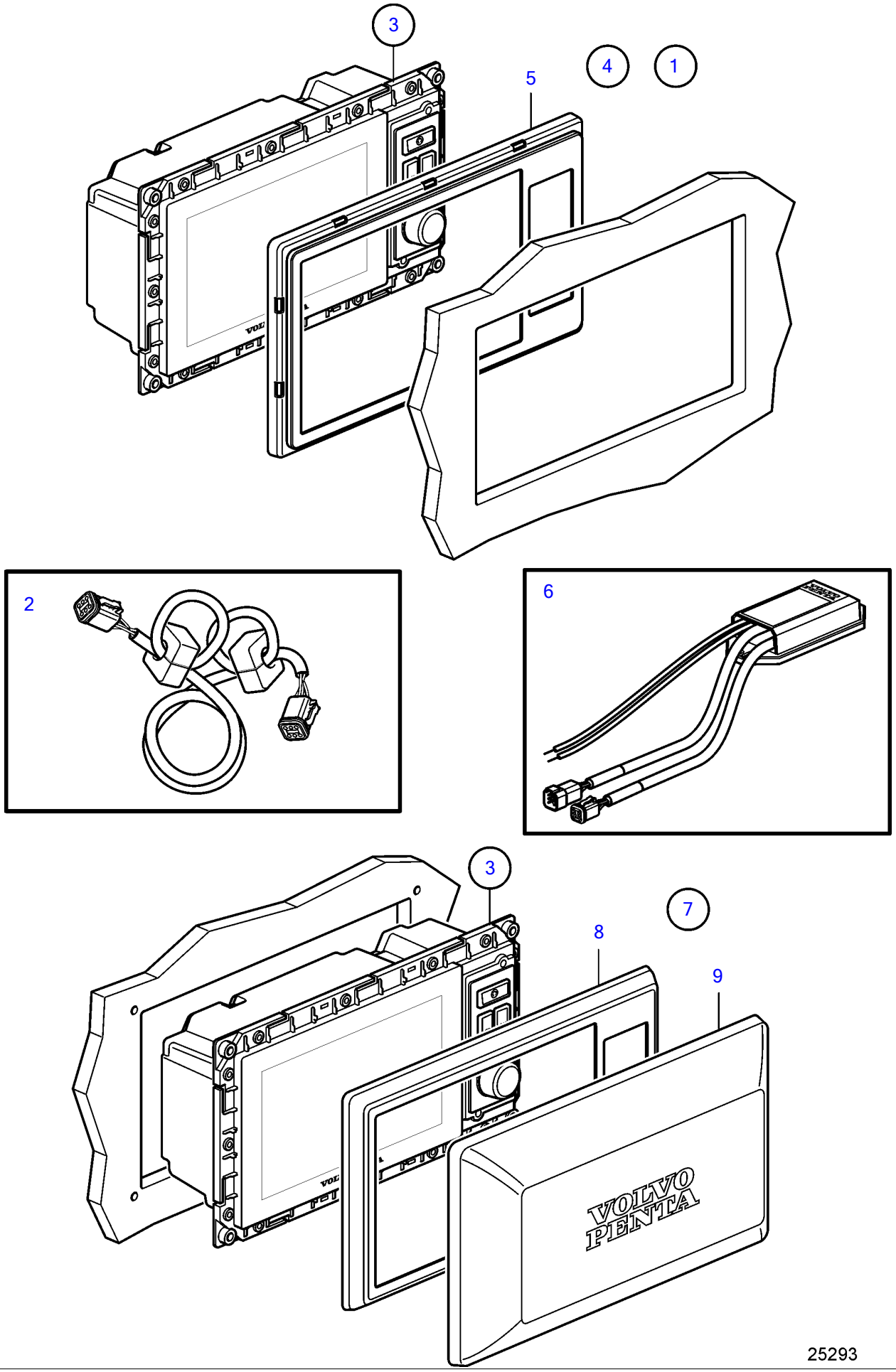

D4-180I-F, D4-225A-F, D4-225I-F, D4-260A-F, D4-260D-F, D4-260I-F, D4-300A-F, D4-300D-F, D4-300I-F

REF	PART NO.	QTY	DESCRIPTION	NOTES
1	22080260	1	Display	For flush mounting.
2	21514712	1	・Cable	
3		1	・Kit	
		1	・・Display	
4	21330288	1	Frame	For flush mounting.
5		1	Frame	
6	21379779	1	Network adapter	12V
7	21330289	1	Frame	For top mounting
8	(21143284)	1	・Frame	Obsolete part, For top mounting
9	21144292	1	・Cover	