D3-140A-G, D3-170A-G, D3-200A-G, D3-220A-G

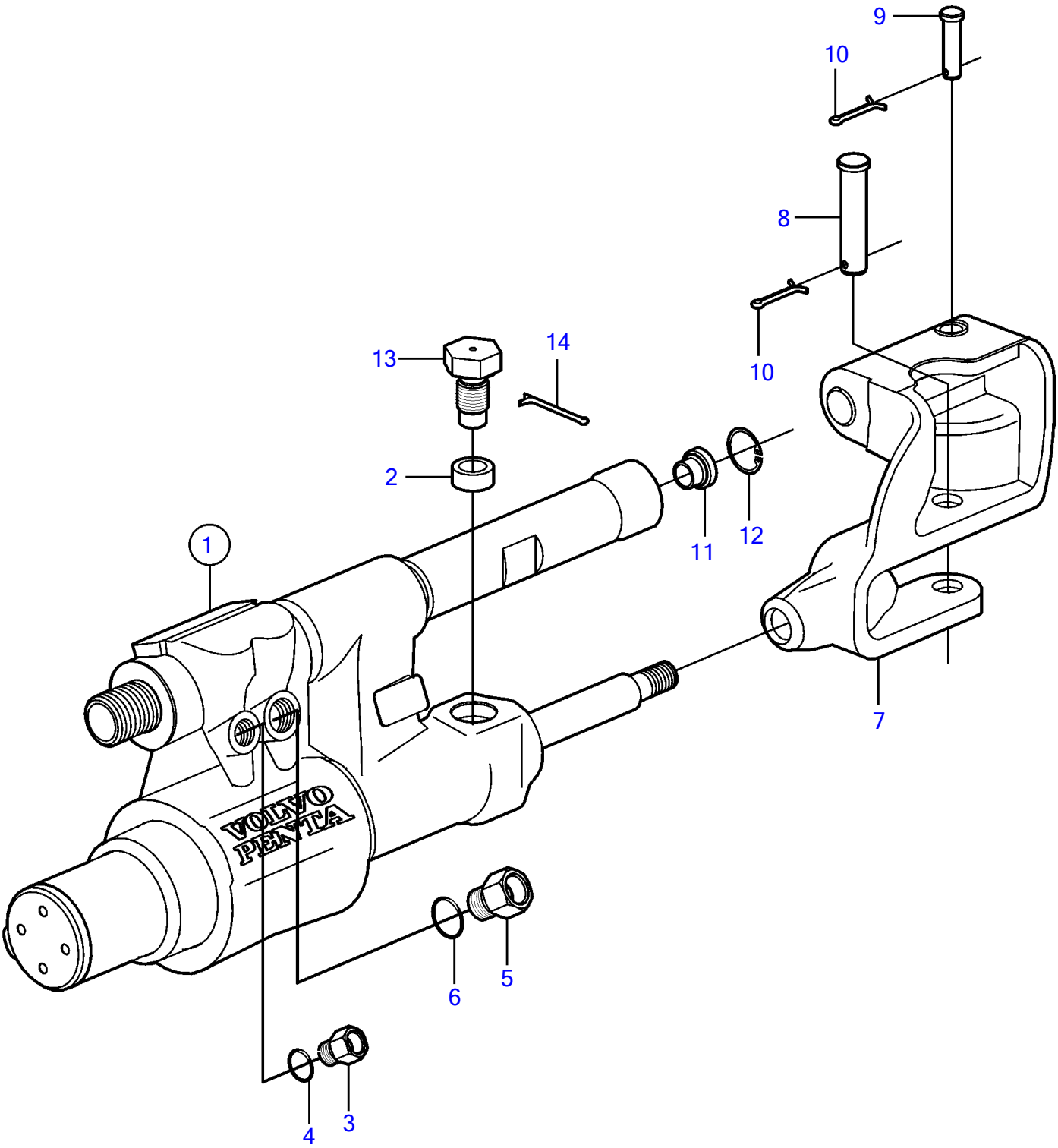

18083

D3-140A-G, D3-170A-G, D3-200A-G, D3-220A-G

REF	PART NO.	QTY	DESCRIPTION
1	3812269	1	Steering cylinder
2	3861035	2	▪ Bushing
3	3859041	1	▪ Fitting
4	3859040	1	▪ O-ring
5	3859043	1	▪ Fitting
6	3859042	1	▪ O-ring
7	3859048	1	▪ Cable attachment
8	3859047	1	▪ Pin
9	3859046	1	▪ Pin
10	3859045	2	▪ Split pin
11	3859052	1	▪ Ring
12	3859051	1	▪ Ring
13	3850931	2	Screw
14	3853376	2	Split pin