D2-55A, D2-55B, D2-55C, D2-55D, D2-55E, D2-55F

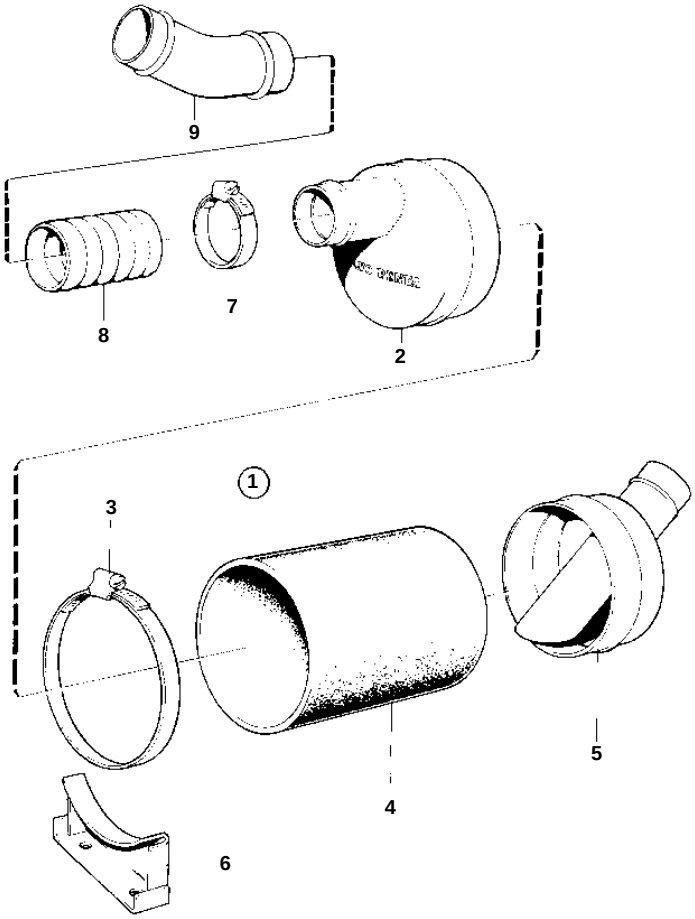

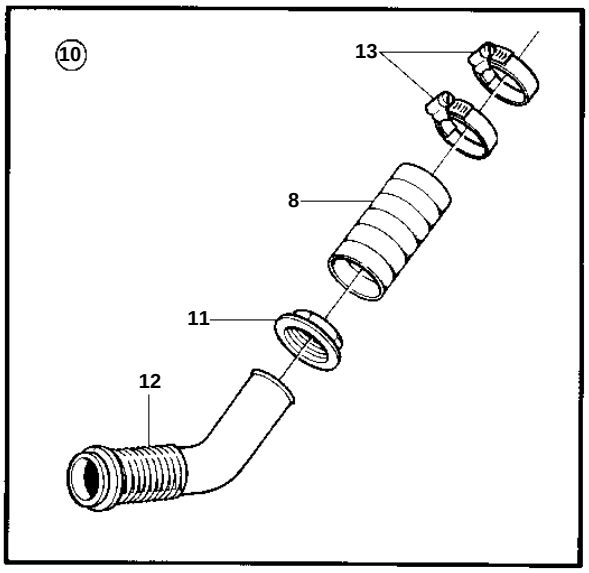

9616

D2-55A, D2-55B, D2-55C, D2-55D, D2-55E, D2-55F

REF	PART NO.	QTY	DESCRIPTION	NOTES
1	838327	1	Muffler	
2		1	· End plate	
3	961678	4	· Hose clamp	
4	828060	1	· Exhaust hose	
5		1	· End plate	
6	828061	2	· Retainer	
7	961673	X	Hose clamp	
8	1140666	X	Exhaust hose	D=57mm (828465)
9	828255	1	Riser	45°
10	831781	1	Hull fitting	
11	827876	1	· Nut	
12	828695	1	· Hull fitting	
13	961673	4	· Hose clamp	