Kit for Expansion Tank Bulk Head Mounted

D2-55B

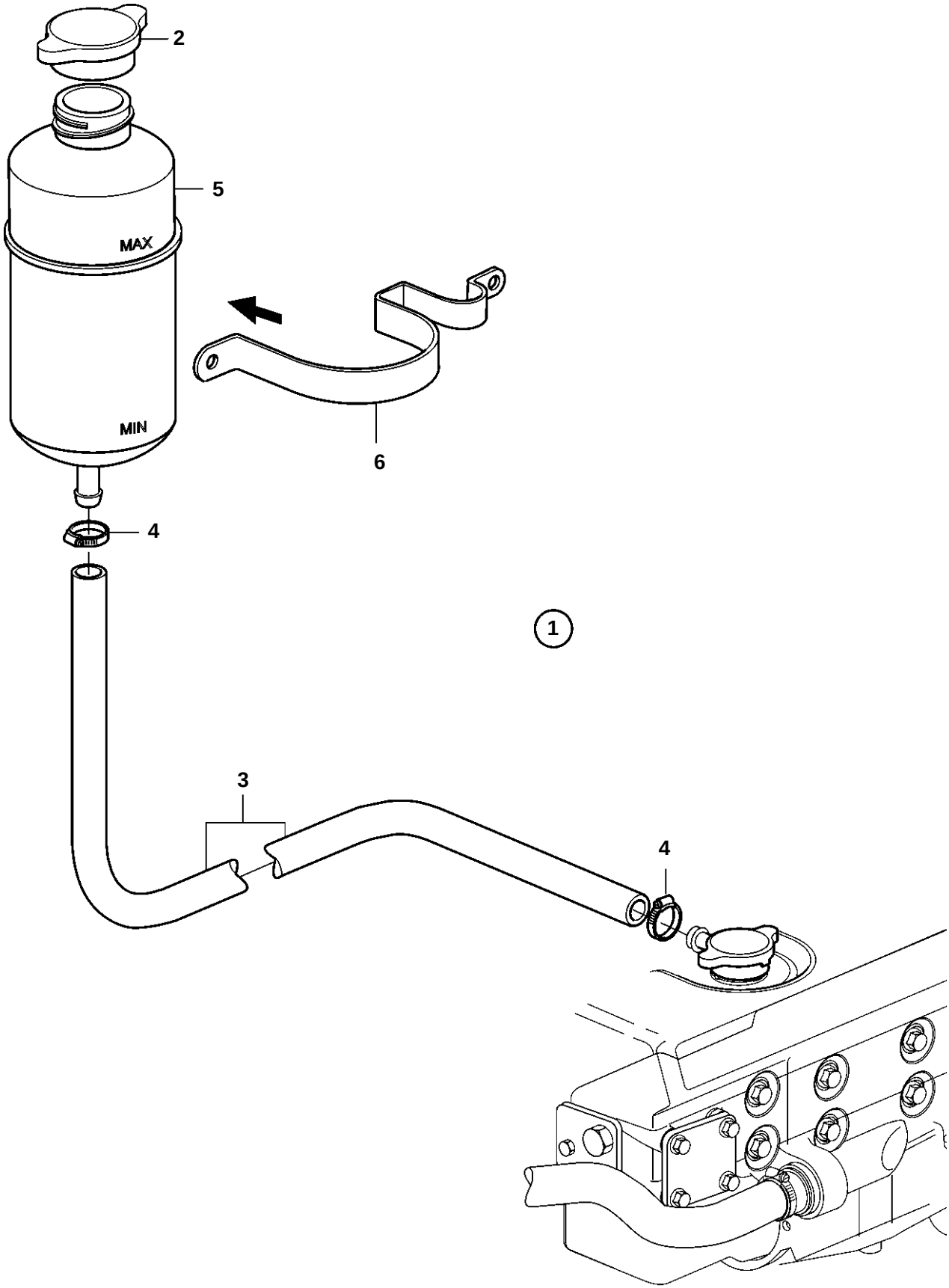

D2-55B

REF	PART NO.	QTY	DESCRIPTION	NOTES
1	3812272	1	Expansion tank	
2	829205	1	· Cardboard tube	
3	942700	1	· Hose	L=2000mm
4	993978	2	· Hose clamp	
5	686834	1	· Expansion tank	
6	679535	1	· Clamp	