D13B-E MH

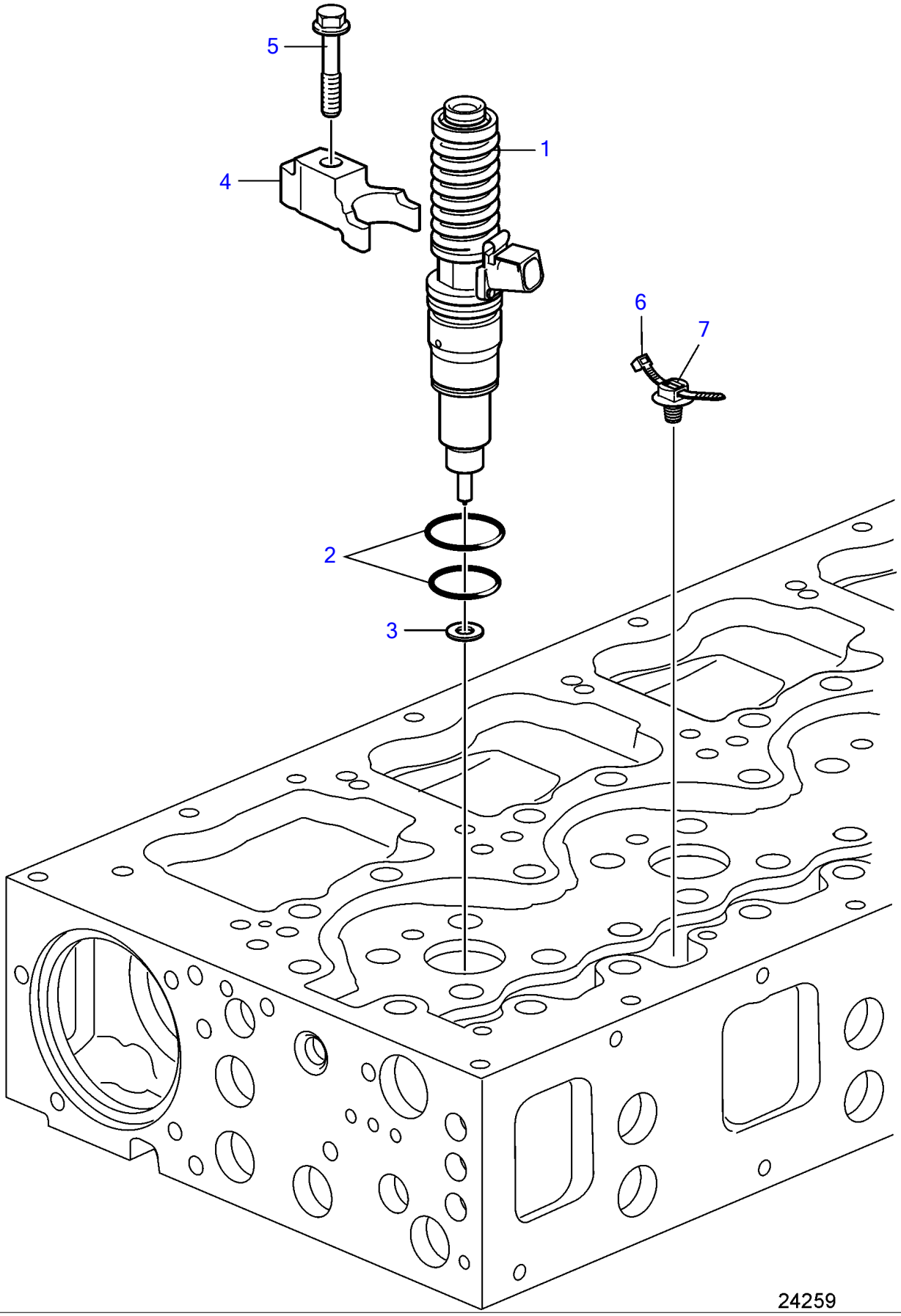

D13B-E MH

REF	PART NO.	QTY	DESCRIPTION	NOTES
1	3801369	6	Unit injector	
2	276948	1	▪ O-ring kit, kit	
3	21261987	1	▪ Washer	
4	21425162	6	Yoke	
5	21344774	6	Flange screw	
6	983472	1	Cable tie	For cable to unit injectors.
7	8131393	1	Retainer	For cable to unit injectors.