Slip Valve for Trolling/Low Speed: ZF311A-E

D12D-A MP, D12D-B MP, D12D-D MP

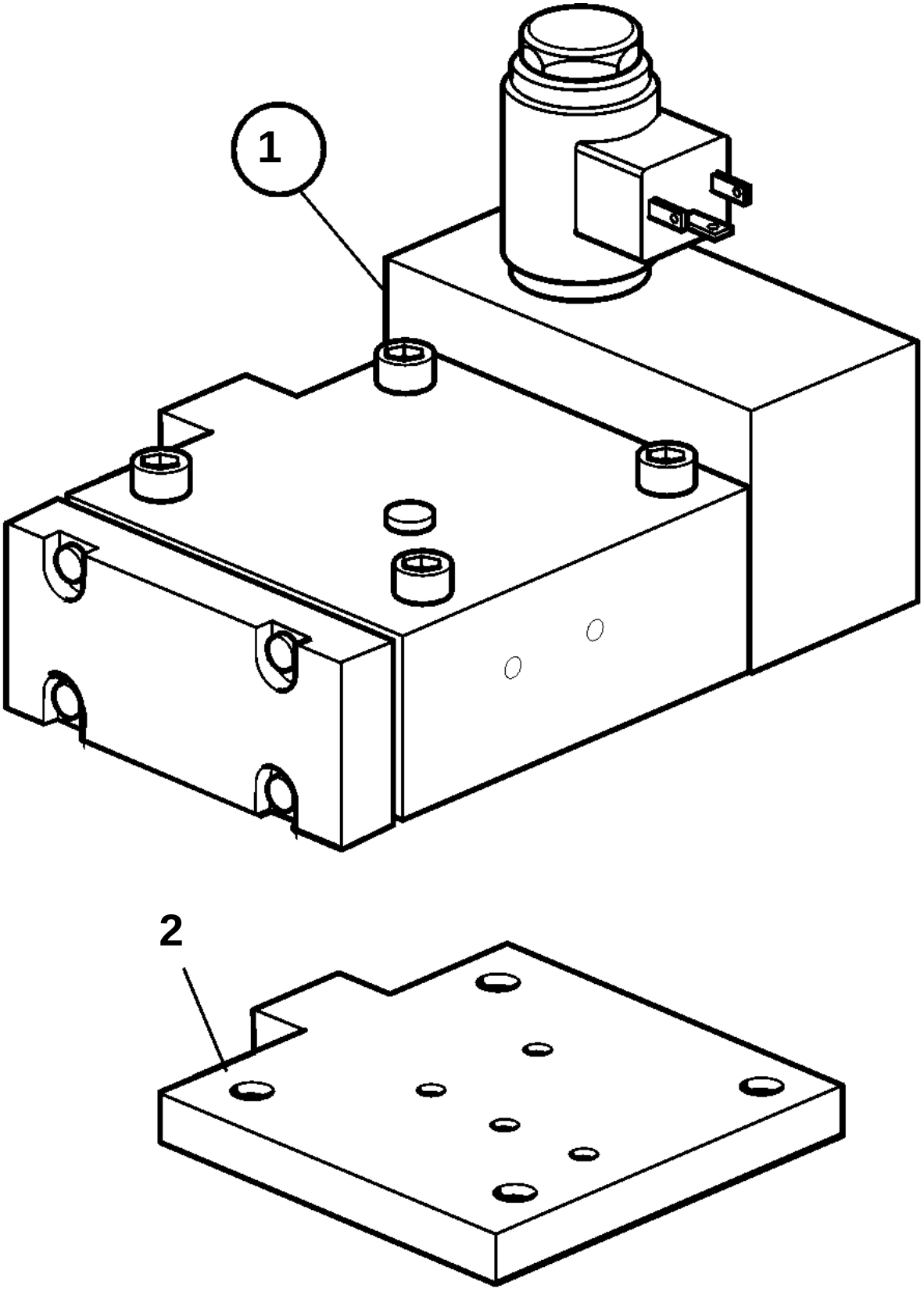

19675

D12D-A MP, D12D-B MP, D12D-D MP

REF	PART NO.	QTY	DESCRIPTION
1	3837092	1	Slip valve
2	3837093	1	Adapter