D12D-A MH, D12D-B MH, D12C-A MP, D12D-A MP, D12D-B MP

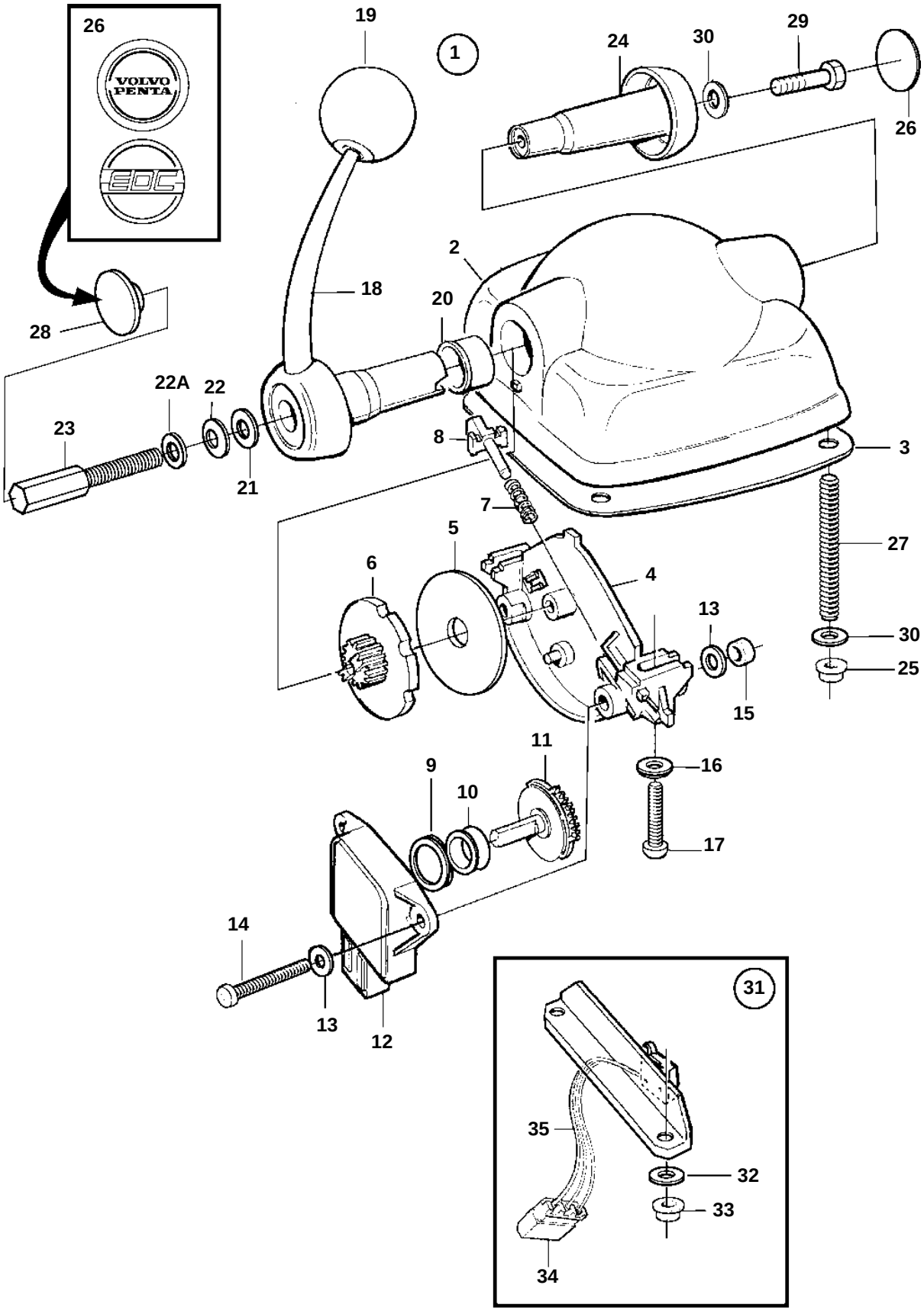

21948

D12D-A MH, D12D-B MH, D12C-A MP, D12D-A MP, D12D-B MP

REF	PART NO.	QTY	DESCRIPTION	NOTES
1	874734	1	Control	For single installation., Black., (1140657)
	3807509	1	Control	For single installation., Stainless.
2		1	· Housing	
3	3581674	1	· Gasket	
4		1	· Plate	
5	3581666	1	· Friction washer	
6		1	· Disc	
7		1	· Spring	
8		1	· Guide lug	
9		1	· Spacer ring	
10	3581676	1	· Ring	
11	3581668	1	· Gear	
12	1336385	1	· Potentiometer	
13		4	· Washer	
14	3581678	2	· Screw	
15	3581680	2	· Nut	
16		2	· Washer	
17	3581681	2	· Screw	
18		1	· Shift lever	
19	3581675	1	· Ball	
20		1	· Bearing	
21		1	· Washer	
22		1	· Disc spring	
22A		1	· Washer	
23		1	· Adjusting screw	
24	3581687	1	· Plug	
25	3581686	4	· Nut	
26	3584000	1	· Decal	VOLVO PENTA
	3581669	1	· Decal	EDC
27		4	· Stud	
28	3582830	1	· Plug	Plastic, For 874734
29		1	· Plug	Stainless., For 3807509
		1	· Screw	
30		5	· Washer	
31	3818851	1	· Microswitch	(873870)
32		2	· Washer	
33		2	· Nut	
34		X	· Insulator	SEE GROUP 30
35		X	· Cable	SEE GROUP 30