D11A-A, D11A-B, D11A-C

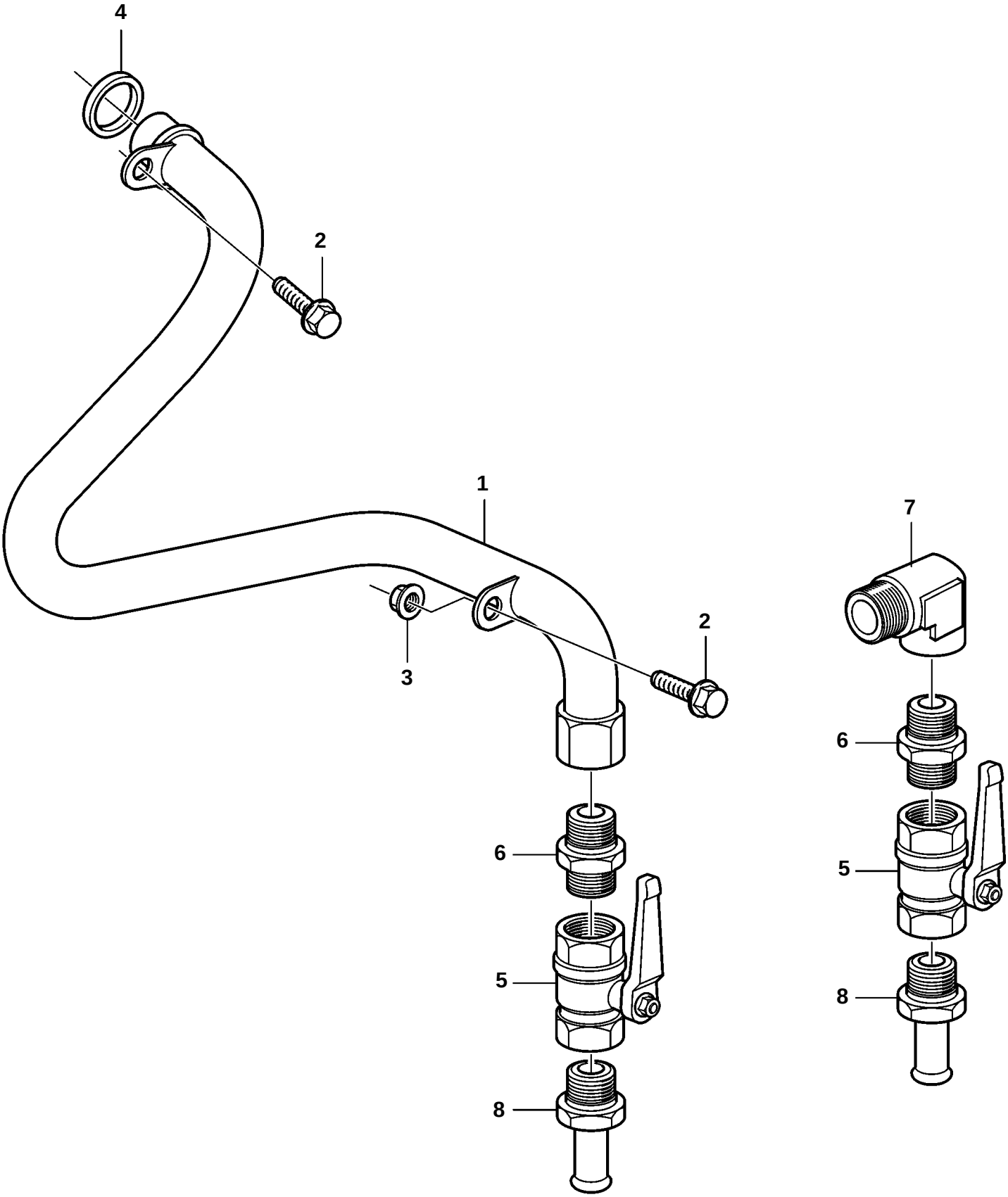

24075

D11A-A, D11A-B, D11A-C

REF	PART NO.	QTY	DESCRIPTION
1	3817763	1	Water outlet pipe
2	946440	2	Flange screw
3	948645	1	Flange lock nut
4	1547252	1	Sealing ring
5	1140097	2	Ball valve
6	16452	2	Double nipple
7	941740	1	Elbow nipple
8	961657	2	Hose nipple