D1-13, D1-20, D1-30

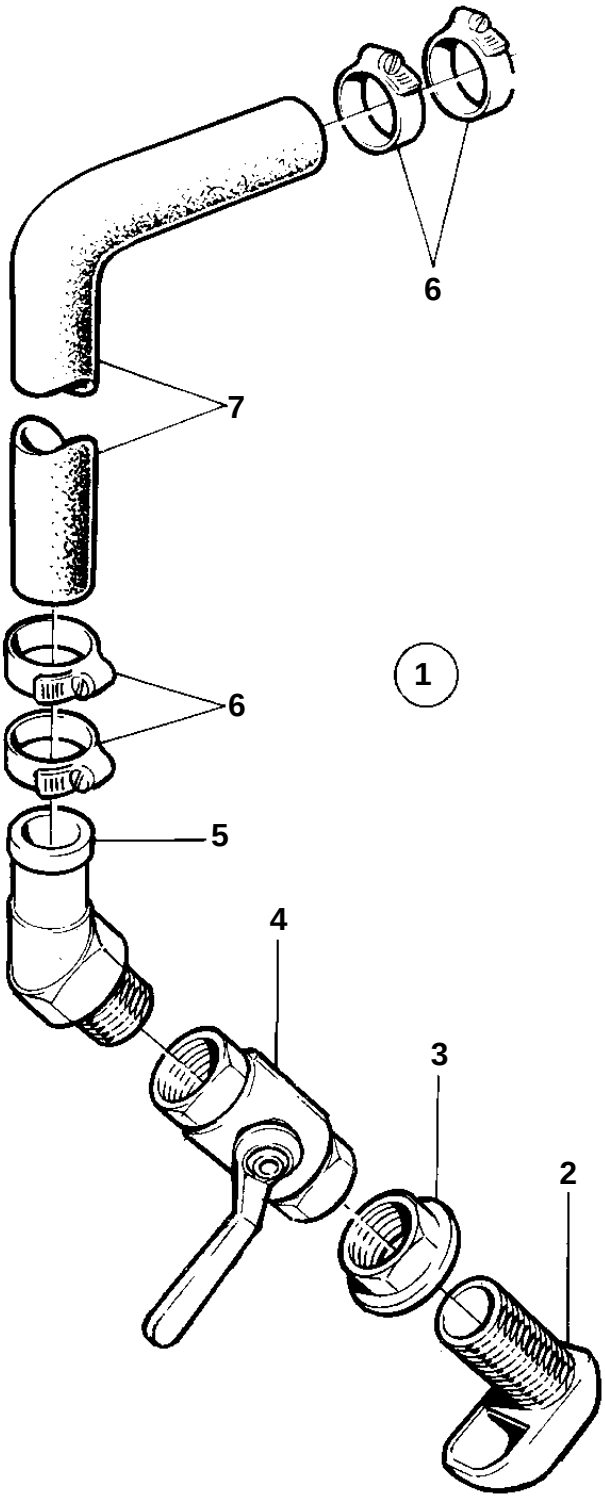

9574

D1-13, D1-20, D1-30

REF	PART NO.	QTY	DESCRIPTION		NOTES
1	861495	1	Cooling wate inlet		19-1/2"
2	836874	1	· Strainer		
3	807595	1	· Flange nut		
4	1140097	1	· Ball valve		D=15mm
5	861465	1	· Hose connection		60°
6	961667	2	· Hose clamp		
7	952970	X	Rubber hose		