D1-13, D1-20, D1-30, D2-40

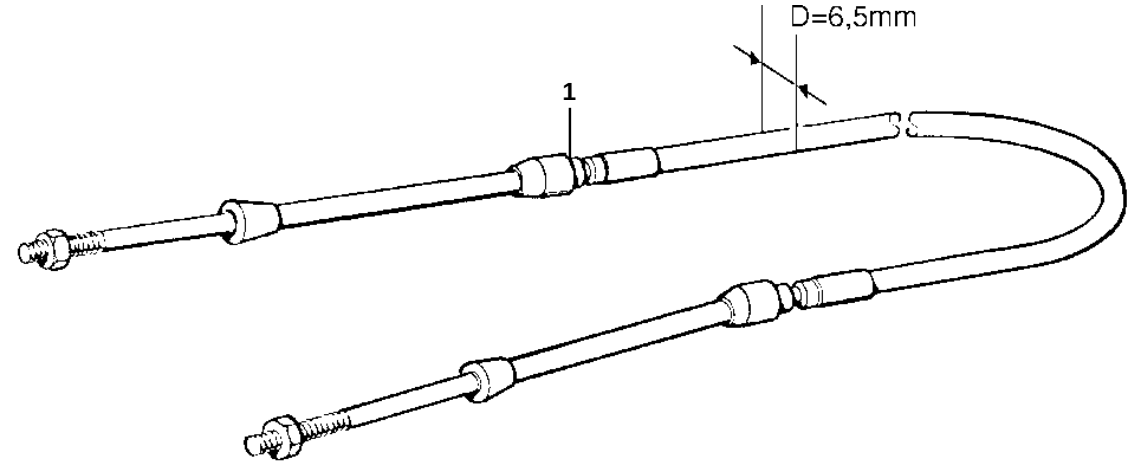

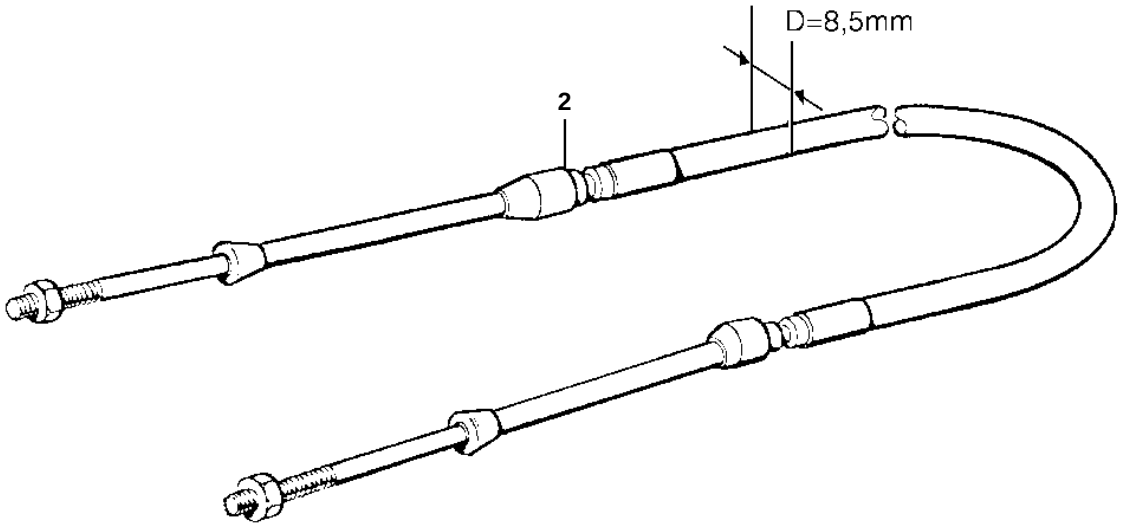

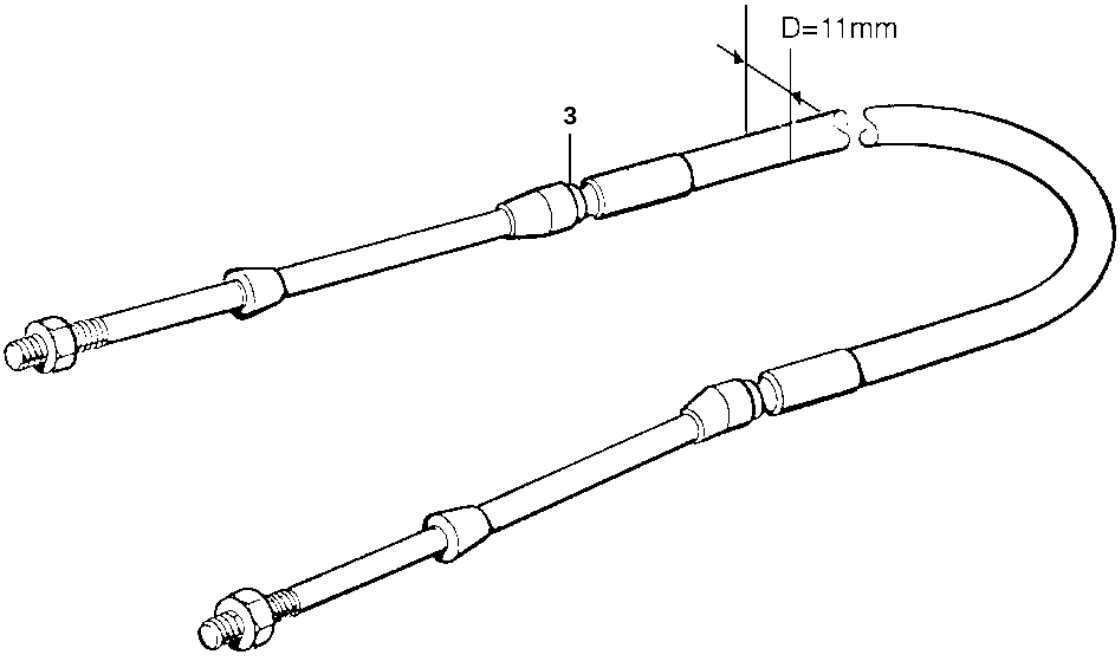

18647

D1-13, D1-20, D1-30, D2-40

REF	PART NO.	QTY	DESCRIPTION		NOTES
2	1140171	1	Control cable		L=1,00m
	1140172	1	Control cable		L=1,25m
	1140173	1	Control cable		L=1,50m
	1140174	1	Control cable		L=1,75m
	1140175	1	Control cable		L=2,00m
	1140176	1	Control cable		L=2,25m
	1140177	1	Control cable		L=2,50m
	1140178	1	Control cable		L=2,75m
	1140179	1	Control cable		L=3,00m
	1140180	1	Control cable		L=3,25m
	1140181	1	Control cable		L=3,50m
	1140182	1	Control cable		L=3,75m
	1140183	1	Control cable		L=4,00m
	1140184	1	Control cable		L=4,25m
	1140185	1	Control cable		L=4,50m
	1140186	1	Control cable		L=4,75m
	1140187	1	Control cable		L=5,00m
	1140188	1	Control cable		L=5,25m
	1140189	1	Control cable		L=5,50m
	1140190	1	Control cable		L=5,75m
	1140191	1	Control cable		L=6,00m
	1140192	1	Control cable		L=6,25m
	1140193	1	Control cable		L=6,50m
	1140194	1	Control cable		L=6,75m
	1140195	1	Control cable		L=7,00m
	1140196	1	Control cable		L=7,25m
	1140197	1	Control cable		L=7,50m
	1140198	1	Control cable		L=7,75m
	1140199	1	Control cable		L=8,00m
	888081	1	Control cable		L=8,25m
	1140200	1	Control cable		L=8,50m
	888082	1	Control cable		L=8,75m
	1140201	1	Control cable		L=9,00m
	888083	1	Control cable		L=9,25m
	1140202	1	Control cable		L=9,50m
	888084	1	Control cable		L=9,75m
	1140203	1	Control cable		L=10,00m
	888085	1	Control cable		L=10,25m
	1140204	1	Control cable		L=10,50m
	888086	1	Control cable		L=10,75m
	1140205	1	Control cable		L=11,00m
	888087	1	Control cable		L=11,25m
	1140206	1	Control cable		L=11,50m
	888088	1	Control cable		L=11,75m
	1140207	1	Control cable		L=12,00m
	888089	1	Control cable		L=12,25m
	1140208	1	Control cable		L=12,50m

D1-13, D1-20, D1-30, D2-40

REF	PART NO.	QTY	DESCRIPTION		NOTES
2	888090	1	Control cable		L=12,75m
	1140209	1	Control cable		L=13,00m