DP-E

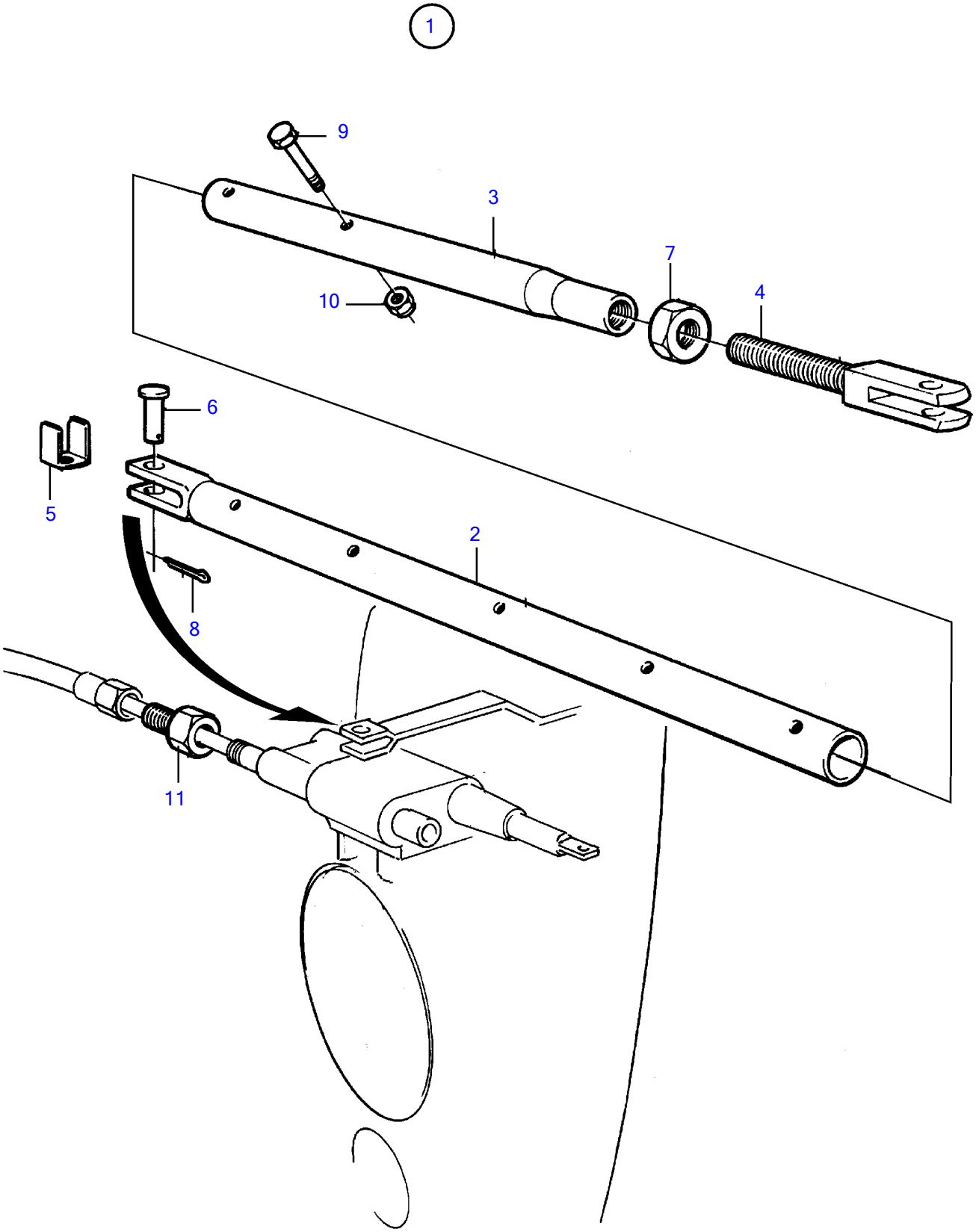


18713

DP-E

| REF | PART NO. | QTY | DESCRIPTION | NOTES |
|---|---|---|---|---|
| 1 | 1140610 | 1 | Link rod kit | L=610-970mm |
| 2 | 828892 | 1 | ・Tube | |
| 3 | 828893 | 1 | ・Tube | |
| 4 | 828894 | 1 | ・Adjusting bar | |
| 5 | 853160 | 2 | ・Lock washer | |
| 6 | 913158 | 2 | ・Clevis pin | |
| 7 | 955806 | 1 | ・Hexagon nut | |
| 8 | 967707 | 2 | ・Split pin | |
| 9 | 970951 | 2 | ・Hexagon screw | |
| 10 | 971089 | 2 | ・Lock nut | |
| 11 | 1140020 | 1 | Impulse limiter | For twin installation. |