Link Rod Kit for Twin Installation

DP-E, DP-G

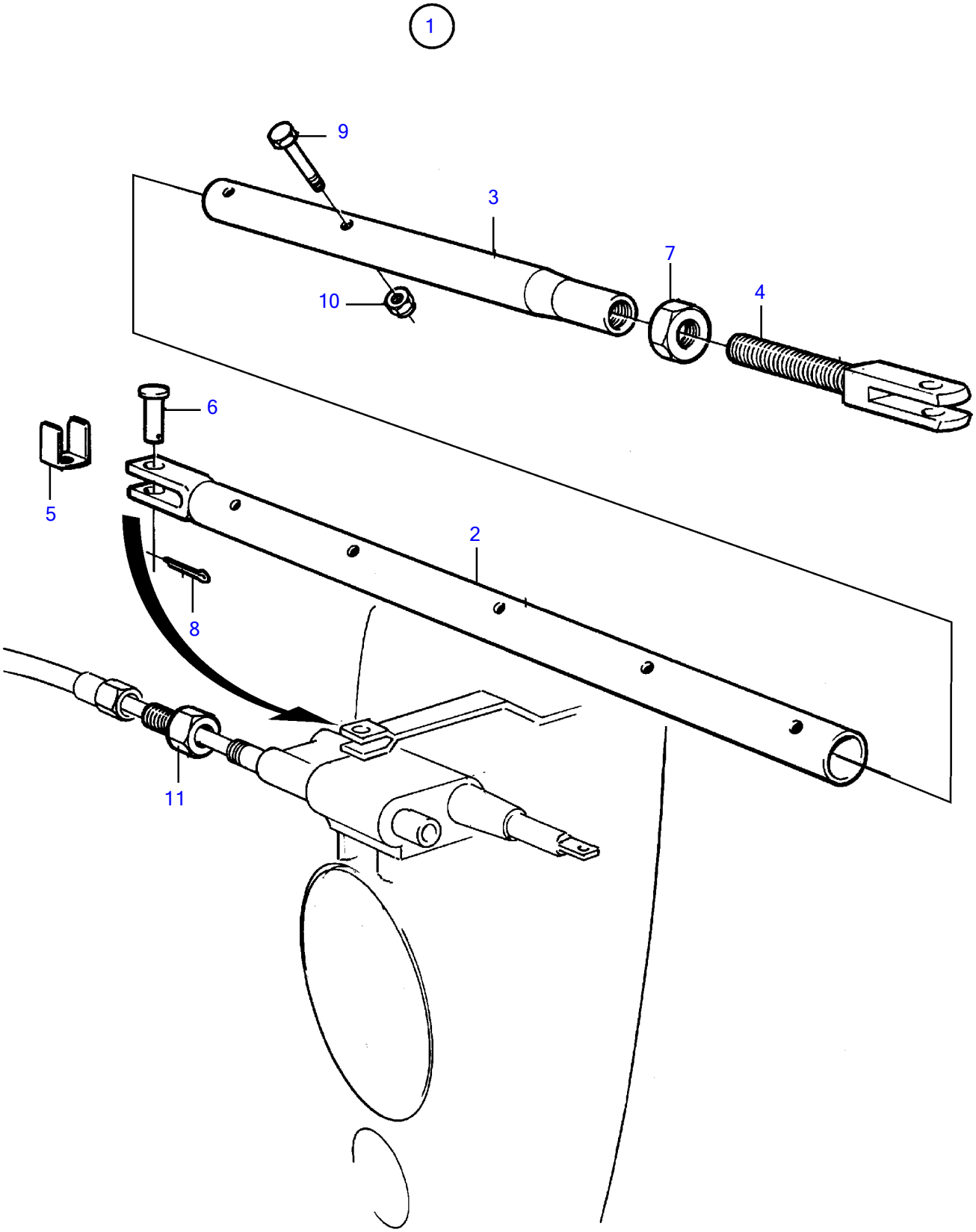

18713

DP-E, DP-G

REF	PART NO.	QTY	DESCRIPTION	NOTES
1	1140610	1	Link rod kit	L=610-970mm
2	828892	1	・Tube	
3	828893	1	・Tube	
4	828894	1	・Adjusting bar	
5	853160	2	・Lock washer	
6	913158	2	・Clevis pin	
7	955806	1	・Hexagon nut	
8	967707	2	・Split pin	
9	970951	2	・Hexagon screw	
10	971089	2	・Lock nut	
11	1140020	1	Impulse limiter	For twin installation.