2003TB

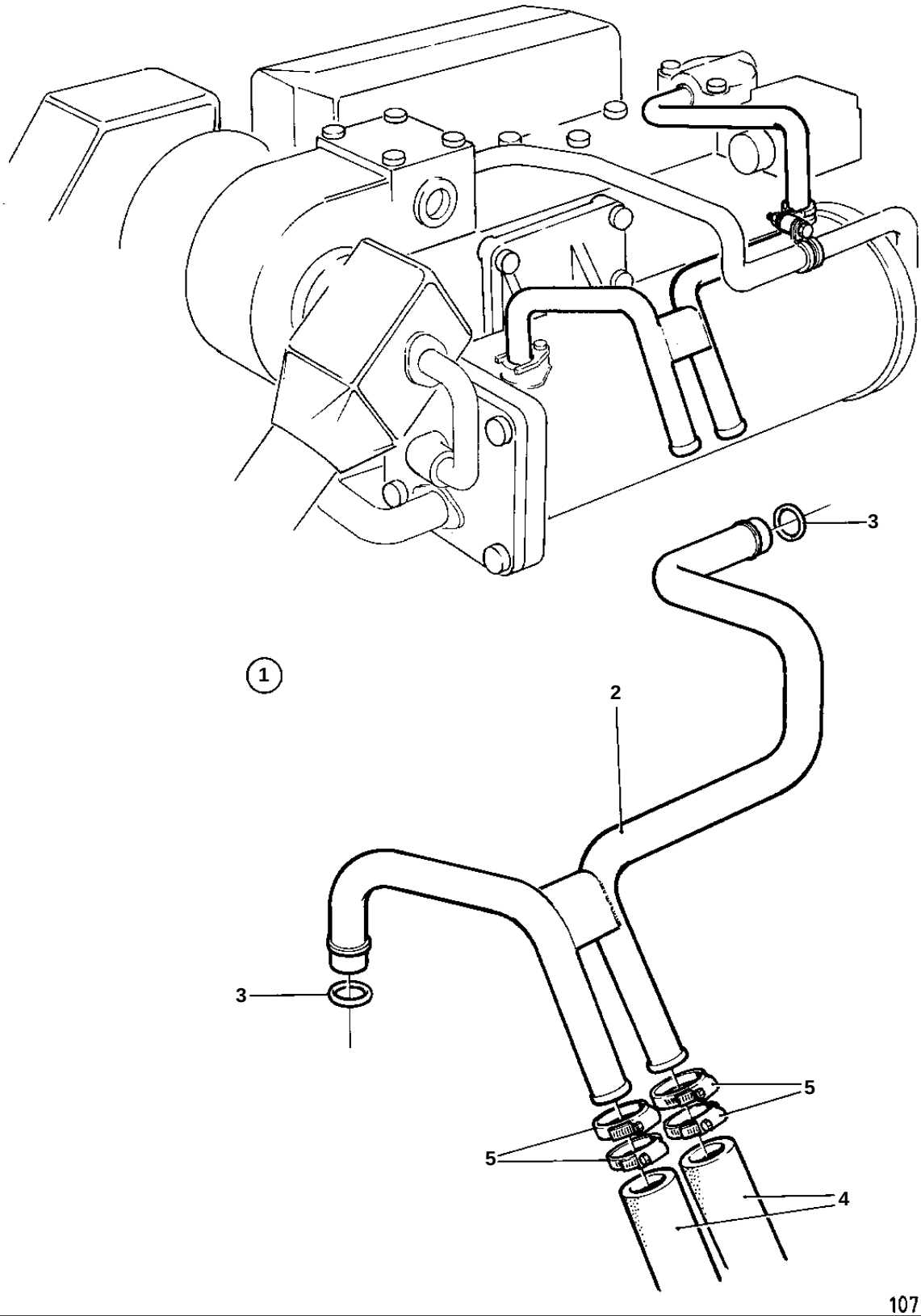

2003TB

| REF | PART NO. | QTY | DESCRIPTION | | SEE SEC. |
|---|---|---|---|---|---|
| 1 | 860896 | 1 | Hot water outlet | | |
| | | | | | 090-0066 |
| 2 | 860534 | 1 | · Coolant pipe | | |
| 3 | 418411 | 2 | · Sealing ring | | |
| 4 | 952969 | X | Rubber hose | | |
| 5 | 961666 | X | Hose clamp | | |