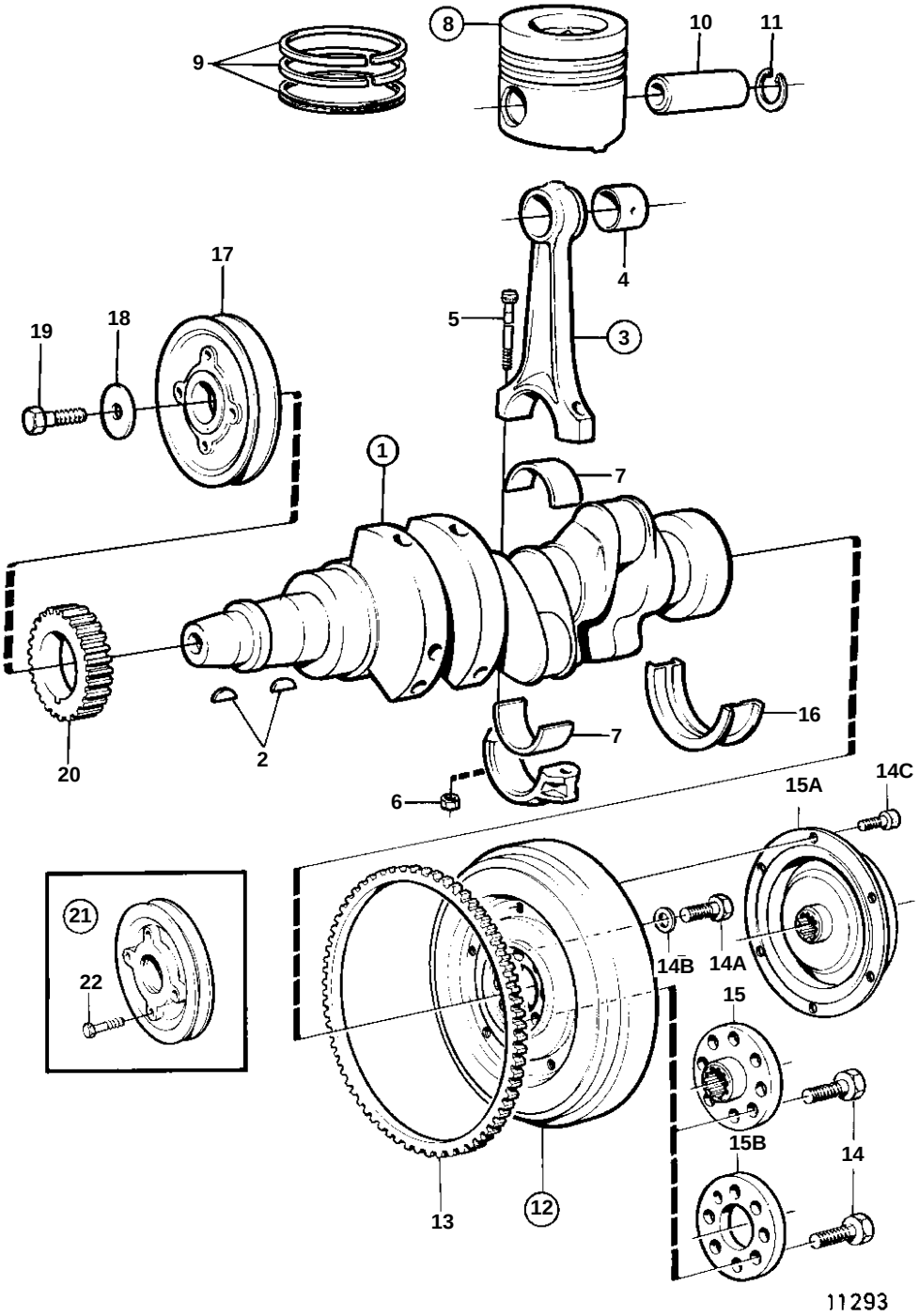
8
10
11
9
4
17
5
3
19
18
1
7
16
7
2
20
6
15A
14C
21
22
14B
14A
15
15B
14
13
12
11293

REF	PART NO.	QTY	DESCRIPTION		NOTES
1	876252	1	Crankshaft		
2	910118	2	· Woodruff key		
3	860073	3	Connecting rod		
4	840703	3	· Bushing		
5	840704	6	· Screw		
6	840705	6	· Nut		
7	875747	3	Big end bearing kit		STD D
	875748	3	Big end bearing kit		0,25MM U.S
	875749	3	Big end bearing kit		0,50MM U.S
8	876249	3	Piston kit		STD D
	876291	3	Piston kit		0,25MM O.S
	876292	3	Piston kit		0,50MM O.S
9	876114	3	· Piston ring kit		STD D
	876115	3	· Piston ring kit		0,25MM O.S
	876116	3	· Piston ring kit		0,50MM O.S
10	840422	3	· Piston pin		
11	951086	6	· Lock ring		
12	858625	1	Flywheel		
13	1326333	1	· Gear ring		
14	970878	8	Screw		L = 40 MM
15B	858801	1	Spacer plate		
16	875751	1	Main bearing kit		STD D
	875753	1	Main bearing kit		0,25MM U.S
	875755	1	Main bearing kit		0,50MM U.S
17	840668	1	Pulley		
18	190763	1	Washer		
19	970948	1	Screw		
20	840350	1	Gear		