2003TB

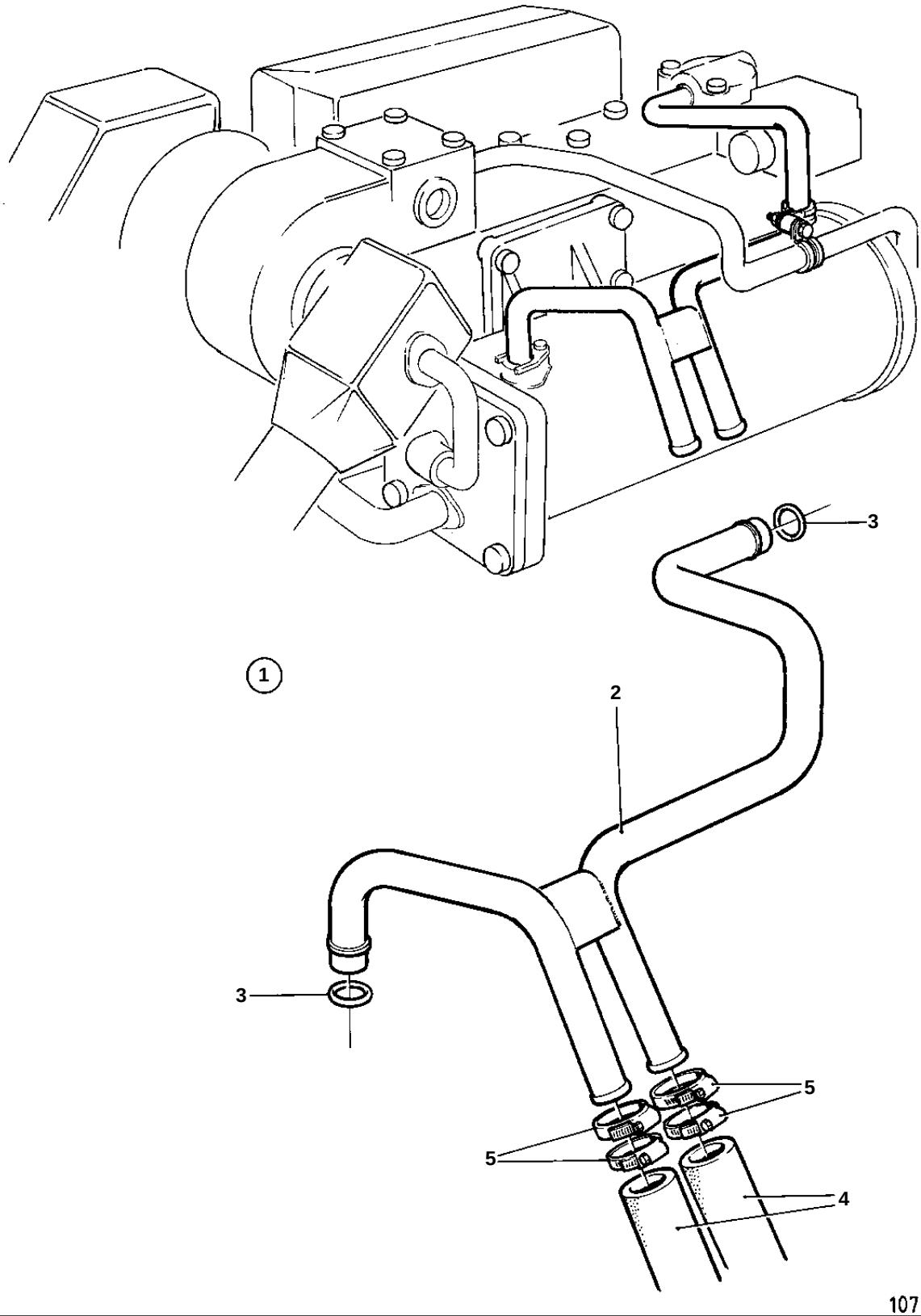

2003TB

REF	PART NO.	QTY	DESCRIPTION		SEE SEC.
1	860896	1	Hot water outlet		
					090-0066
2	860534	1	· Coolant pipe		
3	418411	2	· Sealing ring		
4	952969	X	Rubber hose		
5	961666	X	Hose clamp		