2003

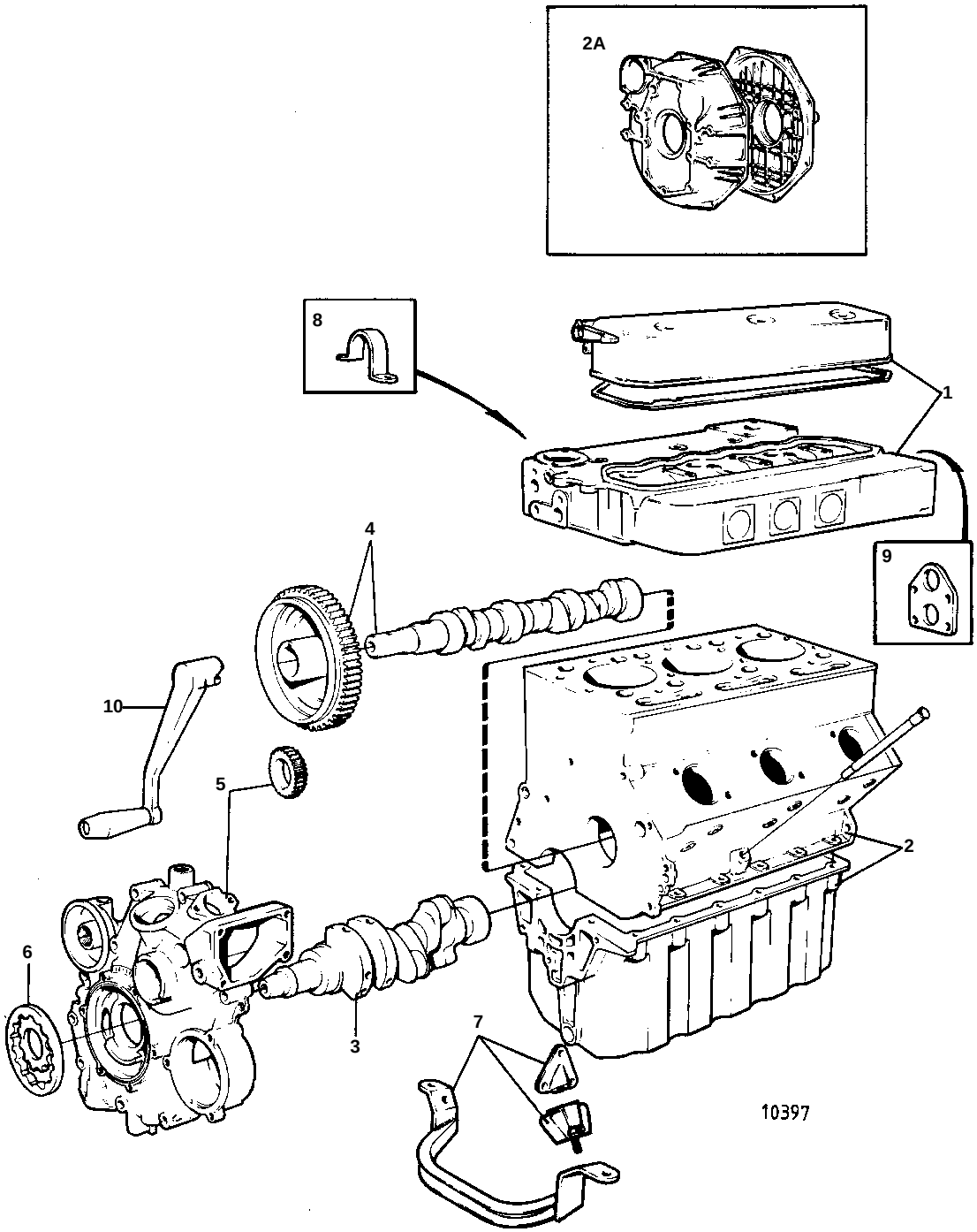

2003

REF	QTY	DESCRIPTION		SEE SEC.	NOTES
1	1	CYLINDER HEAD		02A-4300	
2	1	CYLINDER BLOCK		02A-5300	
2A	1	FLYWHEEL COVER		02A-5900	
3	1	CRANKSHAFT AND RELATED PARTS		02A-6340	
4	1	CAMSHAFT AND VALVE MECHANISM		02A-7200	
5	1	TIMING GEAR COVER AND GEARS		02A-8200	
6	1	LUBRICATING SYSTEM		02A-8700	
7	1	ENGINE MOUNTS		02A-9200	
8	1	LIFT IRON			SEE GROUP 2B
9	1	LIFT IRON			SEE GROUP 2B
10	1	STARTING CRANK			SEE GROUP 9