MERCRUISER (D4.2L/220 IDI VM 254 I/L6)
Serial Nbr Range: 0D554732 thru 0M999999 ()

SHIFT BRACKET (STERN DRIVE)

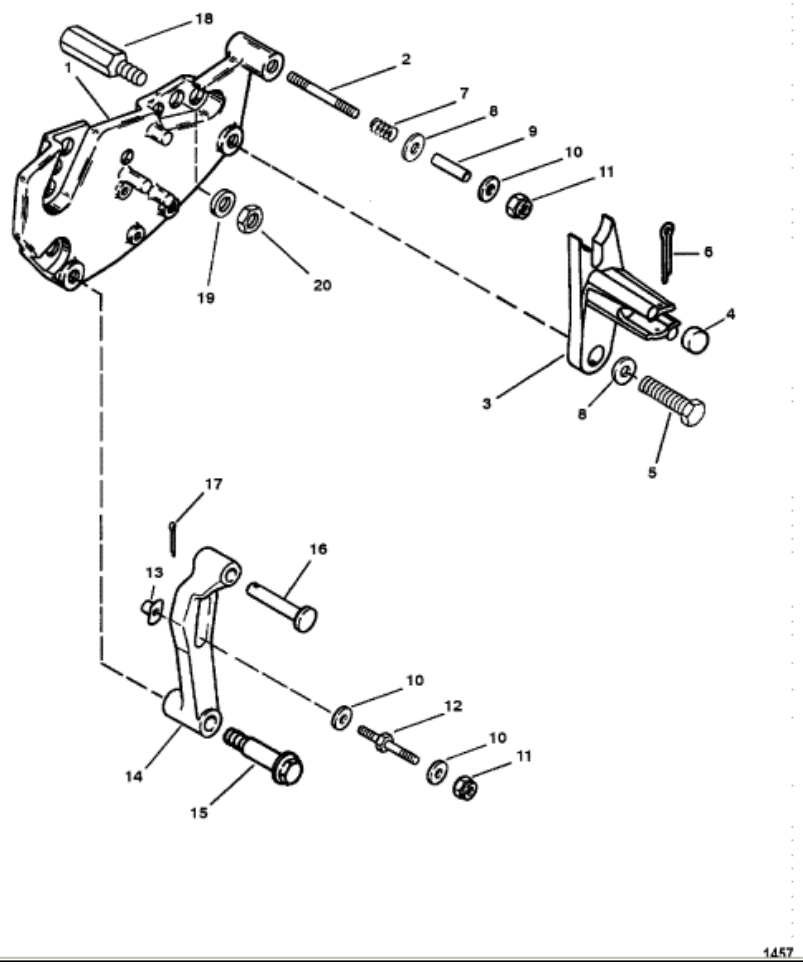

Parts List

Ref	Class	Part	Description	Qty	Comment	Footnote
1		807962A 3	SHIFT BRACKET ASSEMBLY	1		
2	16	98798 1	STUD	1		
3		12381 1	RETAINER	1		
4	23	98828	SPACER	1		
5	10	53167	SCREW	1		
6	18	32857	COTTER PIN	1		
7	24	98880	SPRING	1		
8	12	56720	WASHER	2		
9	23	98820	SPACER	1		
10	12	35462	WASHER	5		
11	11	826711 9	NUT	2		
12	16	96112	STUD	1		
13	11	63341	TEE NUT	1		
14		13898 1	SHIFT LEVER	1		
15	10	13743	SHOULDER SCREW	1		
16	17	68402	SHOULDER PIN	1		
17	18	21071	COTTER PIN	1		
18		805324	EXTENSION	2		
19	13	811460	LOCKWASHER	2		
20	11	40021 3	NUT	2		