MERCRUISER (CMD 1.7 MI 120 I/L4)
Serial Nbr Range: 88109041 _Up THRU none ()

Engine Mounts

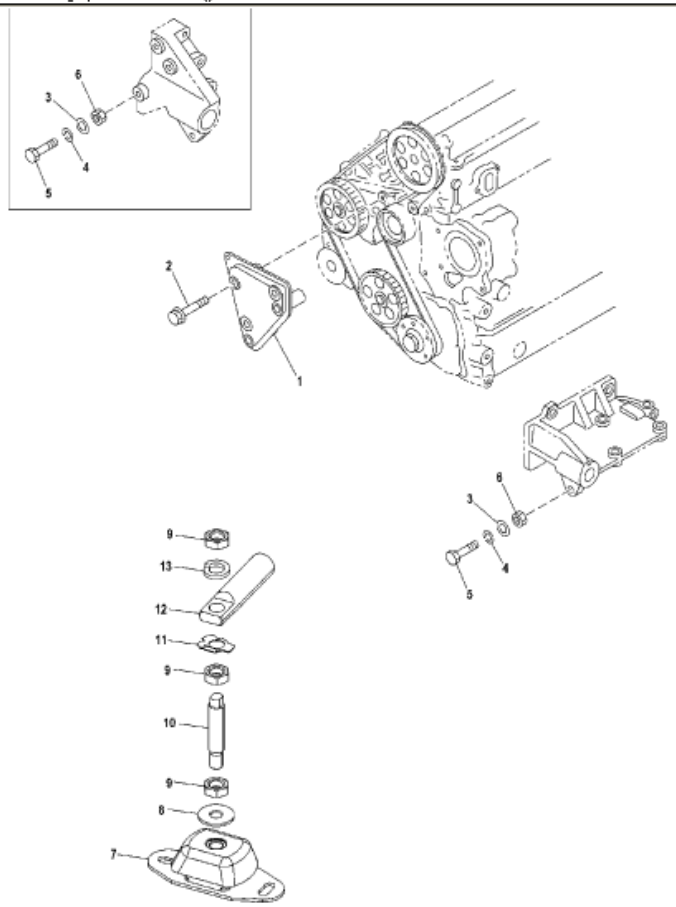

Parts List

Ref	Class	Part	Description	Qty	Comment	Footnote
1		888747	FOOT, Engine	1		
2	10	882311	SCREW, (M10x60)	3		
3	13	882636	LOCKWASHER	4		
4	12	882642	WASHER	4		
5	10	882310	SCREW, (M10x50)	2		
6	11	882725	NUT, (M10)	2		
7		98323A 6	BASE ASSEMBLY	2		
8	12	33171	WASHER, (.6406 x 1.750 x .125)	2		
9	11	20739	NUT, (.750-16)	8		
10	16	816327	STUD, (.750-16 x Special)	2		
11	14	66658	TAB WASHER, Tab	2		
12		66166A 4	TRUNNION	2		
13	13	68102	LOCKWASHER, (.750)	2		