MERCRUISER (5.7LX BRAVO EFI (GEN+) GM 350 V-8 1996)
Serial Nbr Range: 0F800300 THRU 0K001508 ()

FLYWHEEL HOUSING

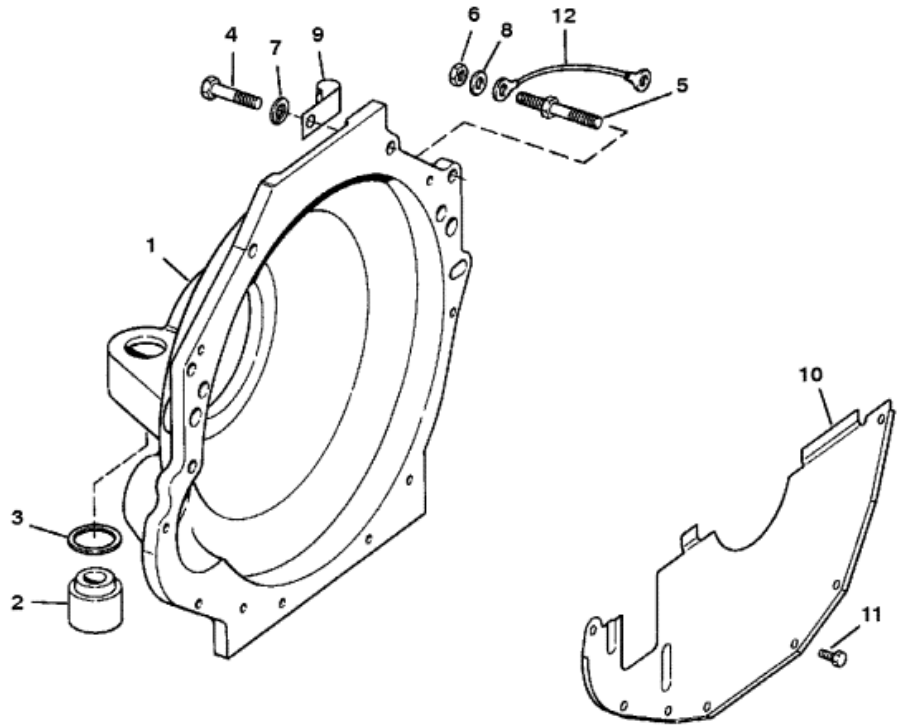

Parts List

Ref	Class	Part	Description	Qty	Comment	Footnote
1		12675A 7	FLYWHEEL HOUSING	1		
2		99297A 1	RUBBER MOUNT	2		
3	23	99322	SPACER	2		
4	10	37612	SCREW (1-1/4")	4		
4	10	35870 1	SCREW (2")	2		
5	16	64066	STUD	2		
6	11	32219	NUT	2		
7	13	35048	LOCKWASHER	7		
8	12	20572	WASHER	1		
9	54	78945	J-CLAMP	1		
9	54	92850	CLAMP	2		
10		818719A 1	COVER	1		
11	10	32773	SCREW	7		
12	84	62826A 6	WIRE	1		